Infinite Energy™
Cold Fusion and New Energy Technology

Volume 4, Issue 19 • 1998

Patented and Tested!

Water-Fueled Kinetic Furnace Enters *New Energy* Race

Breaking News Exclusive – "Catalytic Fusion" in Dr. Les Case's Table-Top Deuterium Gas Reactor

The Perkins-Pope Kinetic Furnace

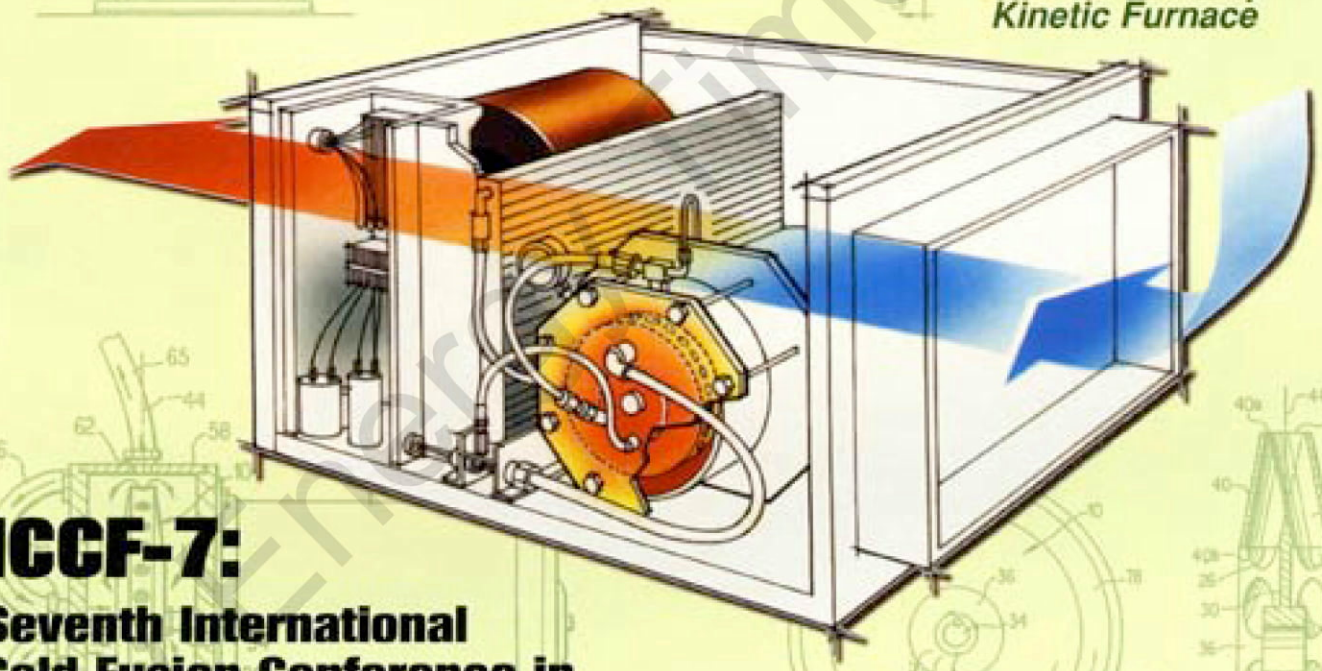

ICCF-7:

Seventh International Cold Fusion Conference in Vancouver, Canada – *A Full Report Inside*

Kinetic Furnace Inventors Eugene Perkins (right) and Ralph E. Pope (left).

$5.95 U.S.
$7.95 Canada
£3.95 U.K.

New Energy Times Archive

COLD FUSION AND NEW ENERGY SYMPOSIUM 1998

WHEN: SUNDAY, OCTOBER 11, 1998 • 8:00 A.M. - 10:00 P.M.

WHERE: HOLIDAY INN, THE CENTER OF NEW HAMPSHIRE CONVENTION CTR.

Convenient to the Manchester, NH airport, 1 hour from Boston's Logan airport.

Speakers, discussions, demonstration units, videos –

•Science •Technology •Investment Opportunities in the rapidly growing Cold Fusion and New Energy field. Tentative list of speakers and companies:

CETI, Storms, Graneau, Rothwell, Mallove, Correas, Fox, New Energy Partners Fund, etc.

Registration fee only $75.00, includes all sessions plus two coffee/refresment breaks.
Chef's luncheon and dinner concession available (guest's responsibility).

Sponsored by:
Infinite Energy Magazine

PLAN A TRIP AT THE HEIGHT OF NEW HAMPSHIRE'S BEAUTIFUL FALL FOLIAGE!

Name:_____ _____ I WILL ATTEND, REG. FEE ENCLOSED

Address:_____ _____ I MAY ATTEND. NOT DECIDED YET

Address:_____

City: _____ Credit Card: MC_____ VISA_____ AMEX_____

State: _____ Zip/Postal Code_____ Card Number:_____

Phone: _____ Signature: _____

Check enclosed:_____ Expir. Date:_____/____

Send to: Cold Fusion Technology, Inc. P.O. Box 2816, Concord, NH 03302-2816;
Phone: 603-228-4516; Fax 603-224-5975, e-mail: staff@infinite-energy.com

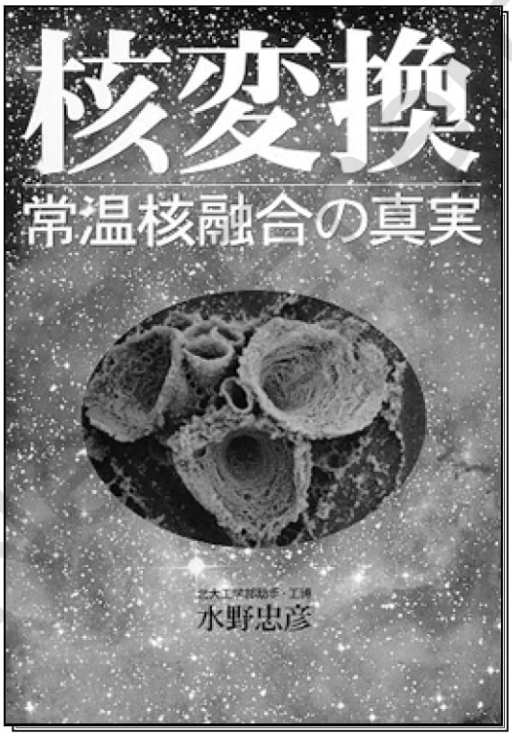

NUCLEAR TRANSMUTATION: THE REALITY OF COLD FUSION

by Tadahiko Mizuno
Nuclear Engineering, Hokkaido University

ENGLISH TRANSLATION
by Jed Rothwell

BOOK TO BE PUBLISHED IN 1998 BY
INFINITE ENERGY PRESS

Reserve your copy now with a 50% deposit!!
$32.95 North America, $39.95 Other Foreign
(Includes First Class postage/Airmail shipping) -*Hardcover*

Cold Fusion Technology, Inc.
P.O. Box 2816, Concord, NH 03302-2816
Phone: 603-228-4516, Fax: 603-224-5975
e-mail: staff@infinite-energy.com

(SEE **IE** ISSUE #17 FOR JED ROTHWELL'S REVIEW OF THE JAPANESE EDITION)

New Energy Times Archive

Infinite Energy™
Cold Fusion and New Energy Technology

Volume 4, No.19, April-May 1998

Editor-in-Chief and Publisher
Eugene F. Mallove, Sc.D.

Managing Editor
Barbara A.F. DelloRusso

Associate Editor
Hal Fox
(Fusion Information Center, Salt Lake City, Utah)

Contributing Editors
Jed Rothwell (Georgia)
770-451-9890
Susan Seddon (UK)
e-mail: sseddon@infinite-energy.com

Information Systems Manager
Jeremy T. Slayton

Scientific Advisory Board
Dr. Harold Aspden
Southampton, UK
Dr. Robert W. Bass
Pahrump, Nevada
Dr. John O'M. Bockris
Texas A&M University (ret.)
Dr. Dennis Cravens
Cloudcroft, New Mexico
Dr. Peter Glück
Institute of Isotopic and Molecular Technology, Romania
Dr. Xing Zhong Li
Tsinghua University, Beijing, China
Dr. M. Srinivasan
Bhabha Atomic Research Center, India
Dr. Edmund Storms
Los Alamos National Laboratory (ret.)

INFINITE ENERGY Magazine: (ISSN 1081-6372) is published six times a year by Cold Fusion Technology, Inc. P.O. Box 2816, Concord, New Hampshire 03302-2816. Subscription price: $29.95 U.S. and Canada, $49.95 other foreign. POSTMASTER: Send address changes to INFINITE ENERGY, P.O. Box 2816, Concord, NH 03302-2816.

INFINITE ENERGY Magazine
P.O. Box 2816
Concord, NH 03302-2816
Phone: (603) 228-4516
Fax: (603) 224-5975

INTERNET:
subscribe@infinite-energy.com
editor@infinite-energy.com

http://www.infinite-energy.com

PRINTED IN THE USA
Copyright © 1998
by Cold Fusion Technology, Inc.
All rights reserved.

Table of Contents - Issue 19, April - May, 1998

FEATURES

9 Cover Story: Water-Fueled Kinetic Furnace Enters the New Energy Race, *by Eugene Mallove*
11 Preliminary Assessment of the "Kinetic Furnace" *by Eugene Mallove and Jed Rothwell*
22 The 7th International Conference on Cold Fusion, *by Jed Rothwell*
32 ICCF-7's Big Surprise, Reproducible Catalytic Fusion, *by Eugene Mallove*
38 Dr. Leslie Case's PCT International Patent Application
41 Cavitation in D_20 with Metal Targets Produces Predicatable Excess Heat *by Roger Stringham, John Chandler, Russ George, Tom Passell, and Dick Raymond*

TECHNICAL ARTICLES

57 How to Think About the Marinov Motor, *by Jeffery D. Kooistra*
62 Motor-in-a-Wheel: An Application of the Marinov Motor *by Thomas E. Phipps, Jr.*
72 AquaFuel: An Example of the Emerging New Energies *by Ruggero Maria Santilli*
79 Alchemy — Historical Reports, Part IV, *by Robert Nelson* Biological Transmutation

DEPARTMENTS

3 Breaking Through - Editorial *by Eugene Mallove*
6 Letters to The Editor
8 Update on Nuclear Augmented Combustion
8 Announcement of Dr. Harold Aspdens, U.S. Patent with Cold Fusion Material and Applications
16 U.S. Patents by Ralph Pope and Eugene Perkins
45 Defenders of the Faiths - *Editorial by Stanley Schmidt*
47 Briefs
• Kaplan's Letters to Clinton, Gell-Mann • Stanley Meyer, Inventor Dies • • CF Presentations at APS - Chubbs and Russ George •
52 Words to Eat
83 Cold Fusion Comix
84 Heretics Series, Part 2 - *by Susan Seddon*
86 Classifieds
87 Highlights and *Infinite Energy* Back Issues
88 *Infinite Energy*—Order Form

About the cover:

Schematic view of Perkins-Pope Kinetic Furnace showing air flow around rotor chamber, electric drive motor, and heat transfer loops. *Diagram courtesy Kinetic Heating Systems, Inc.*
Photo of Inventors by Eugene Mallove. Artwork and cover design by Jeremy T. Slayton.

New Energy Times Archive

By Eugene F. Mallove, Sc.D.

The End of the Beginning...

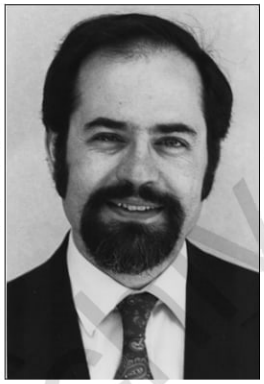

News for which we have all been waiting ... Two major technical developments reported in this issue promise to accelerate the commercialization and therefore the acceptance of cold fusion and new energy.

First, we are happy to bring news of a technology that has been in development since the early 1980s, the "Kinetic Furnace" of Kinetic Heating Systems, Inc. of Cumming, Georgia. The invention of Eugene Perkins and Ralph E. Pope is an electric motor-powered rotary cavitation water heater, of the type we have discussed in previous issues of *IE*. This one seems to have been optimized to work very well, indeed. It is nearing turn-key commercial application.

Already operating in the multi-kilowatt range, it appears to have a solid track record of verified production of more energy output than electric energy input (usually about 4.0 kilowatts input). It's coefficient of performance is typically 1.5 (the ratio of output thermal power to input electrical power), but there are often excursions approaching 2.0 and beyond. Self-sustained operation, extracting vast amounts of energy from small quantities of water, is a distinct possibility if the process can be better understood, stabilized, and improved.

The other development, which was revealed in April at ICCF-7 (The Seventh International Conference on Cold Fusion), soon after we had performed a preliminary on-site verification of the the Kinetic Furnace is the "catalytic fusion" process of MIT-trained chemical engineer Dr. Les Case.

Dr. Case has been working on catalytic fusion for over six years. He arrived at his discovery by brilliant chemical engineering intuition and an Edisonian testing process. It appears to be a nearly optimal embodiment of the original Fleischmann-Pons process. A pre-treated activated carbon catalyst with 0.5% to 1.0% palladium or other catalytic metal content apparently can catalyze the fusion reaction of heavy hydrogen (deuterium) gas to helium at elevated temperature (150 to 250 °C). The process is amazingly simple, though the path to its discovery was anything but easy, as we recount in our article about Dr. Case's triumph. That Dr. Case holds four degrees from MIT might make even some die-hards at that "bastion of skepticism" against cold fusion think twice.

This catalytic fusion development paves the way for simple self-sustaining demonstration units—*soon*—that could be widely sold and distributed. These would produce massive amounts of heat for long periods (weeks, months, or years) with *zero* input power, once the reaction was initiated by an external heater. Electric power production on a small scale, by thermoelectric or steam turbine conversion, could follow quickly thereafter. The process appears amenable to scale-up using fluidized beds of the catalyst through which deuterium gas is circulated.

The reason we are hearing from Dr. Case at this late date, even though by good fortune he lives not far from us in the state of New Hampshire, is that he was waiting for his international patent application announcement to issue. It has, and in this issue we have reproduced the historic document in full.

Beyond the all-important technical news behind these developments and the considerable validation that has already occurred for both, we are happy to report that both Kinetic Heating Systems, Inc. and Dr. Case are being pleasantly open about their achievements. Dr. Case has supplied sufficient information for any laboratory to replicate his process and he *wants* others to duplicate and verify it. How refreshing! Of course, he has a significant patent position already underway worldwide and welcomes joint ventures.

Very good news: On April 30th, Dr. Case came to our laboratory in Bow, New Hampshire and with a mixture of his equipment and ours, we were able to observe the astonishing excess power effects of which he spoke at ICCF-7. To see an active cell with *heavy* hydrogen gas and commercially available catalyst maintain a temperature of 13.2 degrees above the baseline control with ordinary hydrogen, made our day— made our *life!* (See our full report on page 33.) The system is an experimenter's dream come true. If we were not so busy putting this issue together in the first week of May, we would be experimenting with this and the Kinetic Furnace round-the-clock.

The Kinetic Furnace has four U.S. patents already backing it up, the last of which we reproduce in full in this issue. One of the largest water heater manufacturer's in the world—State Industries of Tennessee—is said to be looking at the device seriously for commercial hot water applications. That company is known to be surveying this field carefully. After all, any company that is vending energy producing devices and which does not take cold fusion and new energy seriously, is in grave and growing danger of becoming extinct in the foreseeable future.

We appear to have reached a major turning point. This could be the proverbial "End of the Beginning" phase of the New Energy Age. Prior to this time, it was difficult or impossible for those trying to satisfy themselves that these new energy sources are real to "see, feel, and taste" the new devices. Now with powerful and potent demonstration units and easily reproducible processes available, the New Energy Revolution can take its natural course. We hope for and expect a rapid ramping up of commercial activity.

Some notable skeptics—and even some discouraged adherents of cold fusion science—may have thought that ICCF-7, which met in the exceptionally beautiful city of Vancouver, Canada (April 19-24), would be a morose affair. It was anything but. A lot of "new blood" has come into the field—many young scientists were there and reported on their research. Physics Professor John Dash of nearby Portland State University (Portland, Oregon) is leading the field with a well-trained group of students, one of whom may have been the first anywhere to receive a Ph.D. exclusively for cold fusion work. There were over 200 meeting attendees, including scientists, engineers, inventors, and investors.

A new face in cold fusion, Dr. Bruce L. Cain of Mississippi State University, led off the program by describing a new electrolytic cold fusion process in which 200 watts of thermal power were produced for 20 hours —with no input power after initiation! He provisionally ruled out

Editorial continued on page 5

New Energy Times Archive

Revealed to the World...

Now....At Your Own University or Corporate Laboratory, Test the Low-Energy Transmutation Process for Remediating Radioactivity* in Natural Thorium — and Other Elements

*Radioactive Elements are converted to stable elements within hours, a process that takes Nature billions of years

The Cincinnati Group

is pleased to make available to scientists and engineers

A Low-Energy Nuclear Transmutation KIT— LENT™

Now taking orders for immediate delivery

U.S. and Foreign Patents Pending

The Radioactivity Remediation Kit, *LENT-1*, includes:

- Specially-Machined, Closed-Cell, Zirconium Electrolytic Chamber
- Full instructions for operation and evaluation of test results
- Technical Assistance

OPTIONAL EQUIPMENT

- Power Supply
- RM-60 Radiation Detector and Software for PC Data Collection

Guarantee: This kit will produce verifiable Transmutations at Low Energy or Your Money Back

• Safety-Checked at Qualified Laboratories for the Absence of Hazardous Radiation—Process is Aneutronic

For price information, ordering, and kit availability, please contact:

The Cincinnati Group

P.O. Box 1262, Covington, Kentucky 41012-1262

Phone: 513-244-1144 Fax: 513-874-6982

http://web.gcis.net/cincygrp

New Energy Times Archive

Editorial continued from page 3

conventional chemical explanations for this effect and has managed to reproduce the process.

Though others might have been discouraged by the official Japanese NHE program's demise (due, in our view, to gross technical mismanagement), the cold fusion torch burns brightly in Japan as reports at ICCF-7 revealed. To cite but one example: Mitsubishi Heavy Industries reported an astonishingly well-instrumented experiment in which researchers simultaneously observed cold fusion excess heat, low-level X-rays, and transmutation of palladium to other elements with anomalous isotope ratios. It is exquisite work that has the support of top management at Mitsubishi.

Italian researchers, led by Dr. Francesco Celani, confirmed the phenomenon of transmutation of thorium in a cell provided by The Cincinnati Group. There were many other papers evidencing both transmutation of metals and excess heat.

This was perhaps the first ICCF conference in which commercialization of cold fusion phenomena was repeatedly addressed by conferees reporting high level results. Our feeling is that the next ICCF, which will be held in Italy in the fall of 1999 and which will be the last International Cold Fusion Conference before the Third Millennium, will feature many more papers on working commercial prototype systems.

As we prepare for our own Cold Fusion and New Energy symposium here in Manchester, New Hampshire next October 11th (please make your reservations soon), we already anticipate a number of demonstration devices being present at the conference.

We also relish the completion by next fall of a professional cold fusion video documentary, which thanks to the bequest of a benefactor we were able to begin making by having interview footage of scientists at ICCF-7. This video will be sold commercially and offered (for a fee) to any broadcast network(s) willing to go against the grain. Chris Toussaint, who produced *Free Energy: The Race to zero Point*, is the Executive Producer. Unlike all previous cold fusion documentaries — a few of them *great* and some of them *terrible* (e.g. "Confusion in a Jar," 1990) — this one-hour program will provide not only historical background to set the context of the science and the story, but also the indisputable evidence for cold fusion from laboratory data. Most important, there will be on-camera, working devices.

Every indication is that the next few years will be an accelerating period of commercial development and growing scientific understanding of a technology that will transform the world—and liberate us from millennia in which the price of energy was paid for with blood and sweat. As they say, we are very privileged to live in "interesting times.

Infinite Energy Solicits Your Manuscripts Dealing with:

- Experimental results in cold fusion and new energy
- Theoretical Ideas
- Book Reviews, Opinions

Submit to: Dr. Eugene Mallove
Infinite Energy Magazine
P.O. Box 2816
Concord, NH 03302-2816

If possible, please send double-spaced hard copy and disk. Software programs used to create equations should *only* be used for extensive equations separated from text. If you have questions regarding format - please contact Barbara DelloRusso, Managing Editor

Institute for New Energy

is an international organization to promote new and renewable energy sources. Its monthly newsletter is

New Energy News,

reporting worldwide on all facets of new and enhanced energy. Memberships in INE are $35 per year for individual, $60 for corporations & libraries, and includes 12 issues of *NEN*

Journal of New Energy,
a Quarterly Scientific Journal
Hal Fox, Editor
Subscriptions are $150 for 4 issues.

Fusion Information Center
P.O. Box 58639
Salt Lake City, UT 84158-0638

Also available, *Cold Fusion Impact in the Enhanced Energy Age*, a book about the near future of the world energy situation.
Phone for information: 801-583-6232

ENECO

ENECO is in the business of commercializing the exciting new field of low energy induced nuclear reactions in solids via patent licensing, joint ventures, and co-operative research.

ENECO

University of Utah Research Park 391-B Chipeta Way
Salt Lake City, Utah 84108 USA
Ph (801) 583-2000 Fx (801) 583-6245 jaeger@ENECO-USA.com

New Energy Times Archive

LETTERS TO THE EDITOR

I am happy to say that the algebraic sign problem (sense of rotation) concerning the Marinov motor (MM), reported by Kooistra[1,2] and myself[3,4], appears finally to be resolving itself. The new force law proposed by Wesley[5,6], $\mathbf{F} = q\mathbf{E} = q[-\nabla\phi - d\mathbf{A}/dt]$, has been shown[3] by use of a standard vector identity to be equivalent to the accepted Lorentz force law plus an extra term $-q\nabla(\mathbf{v}_d \cdot \mathbf{A})$, which does not show up in most situations because it integrates to zero around closed circuits. (However, I have pointed out[3,4] that its effects should not vanish in plasmas, *e.g.*, in hot fusion experiments.) For analysis of the MM it is expedient not to use the vector identity just mentioned but to express the total time derivative in the force law directly in terms of its defininition. Thus, if we discard the $\nabla\phi$ electrostatic term as irrelevant to the electrically neutral MM, we remain with a "magnetic" force expressed in terms of the magnetic vector potential **A** as

$$\mathbf{F} = -q\,d\mathbf{A}/dt = -q\left[\partial\mathbf{A}/\partial t + (\mathbf{v}_d \cdot \nabla)\mathbf{A}\right],$$

or simply

$$\mathbf{F} = -q(\mathbf{v}_d \cdot \nabla)\mathbf{A}$$

, since **A** does not depend on time explicitly. Here $\mathbf{v}_d$ (treated as a constant) is a velocity of "convection," which may be thought of as the velocity in the lab of a "detector" of the **A** "field."

In the MM the **A**-field is *produced* either by real currents in solenoids or by virtual "magnetization" or polarization currents imagined as flowing on the surface of permanent magnets. This **A**-field (actually, potential) acts on the real current flowing in a conducting ring surrounding the magnets. The latter current is viewed physically as a drift of electrons around the ring. A drifting electron acts as a "test charge" responsive to **A**. In short the "detector" is the electronic test charge or at least must co-move with the ring electrons. Hence $\mathbf{v}_d$ is to be identified with the flow velocity of electrons in the lab. But conventional plus current is directed oppositely to (negatively charged) electron flow. Hence conventional current, expressed as $q\mathbf{v} = i\mathbf{ds}$, having the direction of **v** or **ds**, must obey $\mathbf{v}_d = -\mathbf{v}$. This flips the sign of force,

$$\mathbf{F} = -q(\mathbf{v}_d \cdot \nabla)\mathbf{A} = q(\mathbf{v} \cdot \nabla)\mathbf{A} = i(\mathbf{ds}\nabla)\mathbf{A}$$

(This was done correctly in my recent paper on motor-in-a-wheel application[7] of the MM, but I did not call attention to the sign issue there. It is opposite to Wesley's derivation of sign[6] and to my own previous claim [4].With this sign change, I am happy to say the vector potential theory seems to agree with the bulk of observations … subject to the following caveats or conditions. (1) Experiments have not yet been reported on solenoids; hence in lack of empirical evidence it would be wise to withhold judgment on that case. (2) Experiments with permanent magnets as vertical members of the MM "armature" (magnetic toroid) have verified the sign as given here … but (3) Experiments with soft iron or steel vertical members and strong permanent magnets top and bottom have shown reversed rotation. Points (2) and (3) can be summed up in the rule of thumb that in predicting the MM rotation sense it suffices to consider only the permanent magnets, as "active" sources of magnetism or **A**, and to ig-nore any "passive" portions of the magnetic circuit in which magnetism is merely induced. The latter do not seem to be strong sources of the **A** potential … and the same seems likely to prove true of real currents in solenoids [whether with air cores or high-μcores (?)]. In other words, it could turn out that **A** is more directly related to **H** than to **B** – or, possibly, that the rather cumbersome Heaviside **E**,**H**,**B**,**D** "field" contrivance is creaky with age and ready for replacement with something entirely different. (We have already seen[3] that the force law can be streamlined to $\mathbf{F} = q\mathbf{E}$ by use of d/dt, which also provides true first-order invariance in place of covariance.) It is apparent that there is much good physics to be learned in this area of study.

With highest regards,
Thomas E. Phipps, Jr.
Urbana, Illinois

References

1. J. D. Kooistra, *Infinite Energy* #17, 40 (1998).
2. J. D. Kooistra, *Infinite Energy* #18, 49 (1998).
3. T.E. Phipps, Jr., *Infinite Energy* #17, 43 (1998).
4. T.E. Phipps, Jr., *Infinite Energy* #18, 6 (1998).
5. J. P. Wesley, *Apeiron* 5, 89 (1998), Eqs. (4), (8).
6. J.P. Wesley, "The Marinov Motor, Motional Induction without a Magnetic B Field,"*Apeiron* (forthcoming).
7. T.E. Phipps, Jr., "Motor-in-a-Wheel: An Application of the Marinov Motor," *Infinite Energy* #19 .

•—•—•

Dear Dr. Adams,

Your article, "Conventional Electric Motors," in *Infinite Energy* #18 contains statements with which I disagree. It can be true that conventional testing does not apply to unconventional motors, but it is not an all-inclusive, foregone conclusion. No one can prove a universe of application without clear definitions of the extent of application; and even then, one can be wrong. The world of science and engineering is full of statements and "proofs" that were later demonstrated to be wrong. What is the specific basis for your claim? Your generalization is too broad to be tenable. It is true that conventional testing does not automatically apply to unconventional conditions. It is not true that conventional testing automatically does not apply. Without a specific premise, your claim is not logical. Here is where an absolute guideline does always apply: the rules of logic. Do you see?

The "Watts to Watts, temperature to temperature" statement needs to be supported. What are the bases for your claims that temperature is a measure of efficiency and that variously metered forms of energy do not equate? I take exception to the temperature concept. How do you explain the condition where a motor is operated far below capacity

••SPECIAL NOTICE••

IF YOUR SUBSCRIPTION BEGAN WITH ISSUE #14 *AND YOU HAVE NOT YET RENEWED*, THIS (Issue #19) IS YOUR LAST ISSUE of *INFINITE ENERGY!!!*.

DON'T DELAY—RENEW YOUR SUBSCRIPTION *NOW!*

ENJOY ANOTHER YEAR (SIX MORE ISSUES) AT THE SAME LOW PRICE....STILL ONLY... $29.95 FOR NORTH AMERICA $49.95 FOR OTHER FOREIGN

New Energy Times Archive

and it runs cooler? I contend that its efficiency does not change as much as the temperature does compared to full load. Temperature is not a good indicator of efficiency and is not proportional to efficiency.

I most strongly disagree with the statement that 98% efficient transformers are not as claimed. What basis do you have for this? My basis for disagreement is the behavior of heat flow according to the standard equation for thermal conductivity. Without presenting numbers, consider these common conditions. A one megawatt transformer is roughly one cubic meter in size. Two percent loss is 20 kW. Do you think such a transformer can radiate 20kW over a surface area of 6 square meters without a large temperature increase in its core? Why do you think heat sinks and heat exchanger boundaries are thin? The math of thermal conductivity, even across metals, calls for short distances for a low temperature differential. A transistor mounted to a thin aluminum heat sink fin assembly may dissipate 50 W with a junction temperature of 200 C. This is all short distance, thin materials, and large surface area. Without that heat sink the transistor could only radiate 1 W without exceeding a safe, elevated junction core temperature, usually specified at 275 C. The transistor is small and thin and its core gets very hot when a heat sink is absent, and you say it is untrue for the core of a big, bulky transformer to get hot with only 2% loss? I think you are in error and far from practicing good science. Since your claim contradicts common experience, it should be backed up with data or detailed theory understandable by your readership. Your claim must be so clear that the readership will be willing to abandon their understanding of their experiences. To not do so is an insult to your readers that they are just stupid to have missed something so elementary as your simple statements imply. Another possible response elicited from the readership is one of disbelief and immediate dismissal of your article. In either case, I resent the effect it has on the readership and the reputation of our field of alternative energy and our flagship publication, *Infinite Energy*. Gene does not edit the articles he publishes. It is up to the readership to take care of the content of the magazine. Please take these critical remarks as efforts to put us all on the fast track to the truth, that is the purpose of peer review, not censorship.

Yours In The Pursuit of Truth,
Kenneth M. Rauen
Gregory, MI krauen@msn.com

Proposal to Make Radioactive Methane In the Cincinnati Group's LENT Reactor

Radioactive methane, $^{14}CH_4$, should have a wide market in the nuclear chemistry industry as a raw material for making radiocarbon compounds used as tracers in organic and biochemistry research, if it could be manufactured cheaply at commercial levels.

The LENT-1 Reactor, invented by the Cincinnati group, already has exhibited element transmutation capabilities [1]. A proposed mechanism to explain these transmutations employs a new particle that is neutral to the Coulomb barrier known as an unstable mononeutron, UMN (n*), or hydron [2].

If a hydron approaches a nitrogen-14 nucleus, speculation is that a transmutation to carbon-14 might occur:

$$^{14}_{7}N + n^* \rightarrow ^{14}_{6}C + p \qquad (1)$$

Should reaction (1) be made to occur at a sufficient rate, then the use of ammonium sulfate electrolyte in the LENT Reactor perhaps would produce enough radiomethane to make the process economically feasible:

$$NH_4 + n^* \rightarrow {}^{14}CH_4 + p \qquad (2)$$

Temperatures inside the LENT apparatus reportedly approach 300°F. Hopefully, any methane that accumulates would remain unreacted and no sparking during AC electrolysis would ignite the gas, which then could be later collected, dried and bottled for shipment to customers.

David Moon
Minneapolis, MN

References
1. E.F. Mallove, *et al.*, "Radioactivity Remediation—The Cincinnati Group," *Infinite Energy*, Vol. 3, NO. 13 and 14, pp. 16-28.
2. D. Moon, "Speculations on the Mechanisms of Thorium Transmutation by the Cincinnati Group," *Infinite Energy*, Vol. 3, NO. 15 and 16, p. 23.

•—•—•

Thanks for the issues of *Infinite Energy* with my article in them (issue #18). I seriously think that your magazine is the best science publication in the US—amazing and interesting (and importatnt) stuff every issue. Please keep it coming!

When it comes time for crow pie, so to speak, I hope that you will also hold the University of Utah professors responsible for the damaging and defamatory things that they have said about CF, and which by the way, they continue to inculcate into their students.

I like to think that this energy revolution will be even greater than the information revolution, but instead of PC's we will have PG's (personal generators), which I hope will eliminate much of the human suffering the world over.

Success to you and all your contributors! Sincerely, Brian W. Rex
Brigham City, Utah

We were glad to have published your article, and we thank you very much for your good wishes. Do you mean that physicist Michael Salamon of the U.of U. is still on the warpath against cold fusion? Sounds fishy to me... EFM

21st CENTURY
SCIENCE & TECHNOLOGY
Spring 1998 Features:

- Michelson-Morley-Miller—The Cover-up
  "The Experiments of Dayton C. Miller (1925-1926) and the Theory of Relativity"
  by Maurice Allais
  "Optical Theory in the 19th Century, and the Truth about the Michelson-Morley-Miller Experiments"
  by Laurence Hecht
- AIDS and the Duesberg Controversy
- Into Space from the Sea

SUBSCRIBE!
$25 for 6 issues (U.S.)
$50 for 6 issues (foreign)
Single copies $5 ($6 foreign)

Send check or money order (U.S. currency only) to
21st Century
P.O. Box 16285
Washington, D.C. 20041.

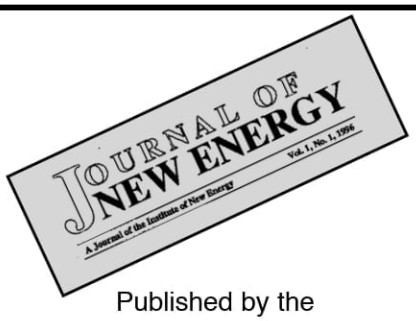

Published by the
Fusion Information Center
P.O. Box 58639
Salt Lake City, Utah
84158-0638

A Quarterly Journal
Hal Fox, Editor

Subscription:
$150 for 4 issues
Single Issues: $45

New Energy Times Archive

Brief Update on Nuclear Augmented Combustion

In Issue #18 of *Infinite Energy* there was extensive coverage of Crystal Energy, Inc.'s "Nuclear Augmented Combustion" process, which appears to yield significant energy enhancement to fossil fuel combustion — beyond presently understandable chemical explanation. This occurs with the simple addition of tiny amounts of lithium compounds to fossil fuels (parts per million level), plus triggering the process with low-level radiation sources (natural or artificial) or electric arcs. The process also substantially reduces the concentrations of various pollutants in the combustion exhaust of treated fuels.

The story, as expected, has provoked widespread interest and investigative activity. A major US corporation (unidentified for now) has just agreed to test the process in its primary propulsion units. More companies are sure to follow. We will provide coverage of these results as they are made available.

Harry Taplin of Crystal Energy, Inc. attended ICCF-7 in Vancouver, providing a brief lecture and poster presentation on his work. This stirred further interest in nuclear augmented combustion among people who have been associated with the chemical industry—as well as a few theorists who thought that the process might fit in with some of their parallel ideas about the mechanism for cold fusion.

Crystal Energy, Inc. shipped one of their radiation-monitoring test-beds to us here in Bow, New Hampshire. This particular one had been used by the late Professor William Gwinn at Berkeley, who was convinced that he had observed alpha radiation from the process. We set up the test bed and worked for a few days here with Harry Taplin in an attempt to measure alpha particle or other ionizing radiation from the process. Our radiation results are intriguing, but not definitive at this early stage. In particular, we need to assure that density fluctuations in the combustion flames, and anomalies of the detectors themselves are not causing false signals. When these matters are clarified, we will publish our findings in *Infinite Energy*. Meanwhile, the process remains a very hot item in the complex of emerging new energy technologies.

Whatever happens with cold fusion or other processes that do not involve fossil fuels, nuclear augmented combustion can be an immediate and simple-to-implement process for reducing fossil fuel consumption and reducing pollution. We appreciate the interest and support of those who wish to see this technology introduced to the marketplace as soon as possible.

—Eugene Mallove

ANNOUNCEMENT OF DR. HAROLD ASPDEN'S PATENT GRANT OF US PATENT 5,734,122: On March 31, 1998 a U.S. patent having relevance to cold fusion was granted to Dr. Harold Aspden of Southampton in England. Dr. Aspden has posted a copy of this patent on his Web site <http://www.energyscience.co.uk>. The patent is a continuation-in-part of an application for a patent on the cold fusion theme filed at the U.S. Patent Office on February 16, 1990 with the benefit of the priority date of a U.K. Patent Application filed on April 15, 1989, within a month of the Utah announcement that began the cold fusion saga.

The examining section of the US Patent Office which is charged with processing cold fusion inventions has obstructed attempts to secure patents in this field, but Dr. Aspden has struggled relentlessly in confronting such opposition. Even though three of Dr. Aspden's such patent applications in the US Patent Office, all linked to that initial application, have not weathered the storm, he still has kept a fourth alive and pending, and the struggle is ongoing.

He tells the story of all this in his Web pages as "Cold Fusion: My Story: Parts I and II". Part II is a record of a blow-for-blow account of the struggle. The success now, in securing the grant of U.S. Patent 5,734,122 emerges because Dr. Aspden filed his application as a 'Thermoelectric Energy Conversion Apparatus.' The point of special interest is that Dr. Aspden included in the specification a very substantial Appendix concerning cold fusion.The overall message is clear. As with the Patterson invention, if you are lucky enough to have your U.S. patent application classified for examination by a group other than that specializing in rejecting cold fusion then you may secure patent grant. *(Abbreviated patent begins in next column).*

Important U.S. Patent Issued with Cold Fusion Material and Applications

United States Patent Patent Number: 5,734,122
Aspden Date of Patent: Mar. 31, 1998
THERMOELECTRIC ENERGY CONVERSION APPARATUS
Inventor: Harold Aspden. Acres High, Hadrian Way, Southharnpton SO16 7HZ, England
Appl. No.: 520,008 Filed: Aug. 23,1995

We are only able to reproduce an abbreviated version of this patent dealing with cold fusion

ABSTRACT

Apparatus is disclosed in which a pair of elongated solid cylindrical metal conductors mounted with their central axes mutually parallel are connected at their ends to form a closed electrical circuit path, there being heat sinks at spaced positions along their length which serve as heat transfer means setting up a temperature gradient along the lengths of the conductors. A strong electrical current flow in the conductors creates a circumferential magnetic field in the metal directed at right angles to the heat flow and this, by the Nernst Effect, produces a radial electric field gradient in the metal coupled with the transient accumulation of stored electrical energy. The apparatus disclosed serves for the experimental testing of energy conversion and storage by thermoelectric processes occurring in the metal and the ultimate utilization of the technology involved.

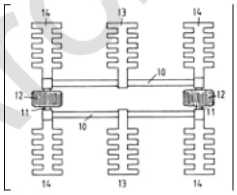

Figure shows an apparatus which represents a preferred embodiment of this invention, there being a simple elongated rectangular conductor loop circuit including as its main components two mutually parallel solid cylindrical metal conductors with connected heat sinks.

6 Claims, 2 Drawing Sheets

THERMOELECTRIC ENERGY CONVERSION APPARATUS CONTINUATION RELATIONSHIPS

This application is a continuation-in-part of PCT/US94/ 05797, filed 23 May 1994 and U.S. patent application Ser. No. 08/191.381. filed 3 Feb. 1994. now abandoned, which is a continuation of U.S. patent application Ser. No. 07/480. 816. filed 16 Feb. 1990, now abandoned.

FIELD OF INVENTION

The invention relates to energy conversion apparatus in which electric field effects are produced in an electrical conductor by the combined action of a magnetic field and heat flow. The magnetic field is produced by electrical current flow in the body of that conductor and the field of invention is therefore essentially in the discipline of thermoelectricity, notably involving the Nernst Effect, which relates temperature gradient, magnetic field and a mutually orthogonal induced electric field powered by the heat resource. The research on which the invention is based has demonstrated certain energy anomalies some of which are not yet well understood, but which involve apparatus having general design features based on sound and well understood scientific principles.

The invention is only concerned with specific novel and non-obvious features of apparatus to be utilized in the onward experimental research and the eventual technological applications which can exploit these energy anomalies.

Aspden Patent continues on page 15

America's ONLY Inventor's Magazine!

Inventors DIGEST

Since 1985 ***INVENTORS' DIGEST*** has been giving inventors—just like you—the information they need!!! Every good idea deserves a chance...but where to start?
Take advantage of our special subscription offer and your questions will be answered!
••• 1-800-838-8808 •••
SPECIAL NO-RISK OFFER!
Call today and we'll put your first issue in the mail...take a look...you're under no obligation (except to your invention!)
Six issues per year. Subscription rate: $22/yr.
INVENTORS' DIGEST
4850 Galley Rd., Ste. 209, Colorado Springs, CO 80915

Water-Fueled Kinetic Furnace Enters the New Energy Race

by Eugene Mallove

There is perhaps no more difficult-to-accept purported over-unity device than one which friction-heats water, agitates its molecules to kinetic frenzy, and produces more thermal energy output than electric power input. And yet, there has been much evidence mounting through the years that such devices are, indeed, realizable. From what micro-physical source the excess energy comes (assuming that it *is* real) is unknown.

Now one machine has "come out of the woodwork" — or should we say "come in from the cold" — and is available for testing, scientific investigation, and purchase by other research laboratories. This is the "Kinetic Furnace" of Kinetic Heating Systems, Inc. of Cumming, Georgia. Its hard-headed inventors, who have pursued their technological wonder since the early 1980s are Eugene Perkins and Ralph E. Pope. Perkins is a self-taught mechanic who revels in tinkering with and perfecting "impossible" devices. Pope, joined with Perkins 18 years ago to develop the Kinetic Furnace. He is a successful inventor and patent developer. His career has included medical school, medical illustrating, and product marketing. The Kinetic Furnace, a joint invention of Perkins and Pope, is heat-producing rotary cavitation device for which the inventors have been granted four United States patents, the most recent one in 1994.

For the better part of a year, we had been hearing about this device from Ralph Pope. He had told us that one of the largest commercial hot water heater manufacturers in the world, State Industries of Tennessee, had been calling regularly to check on their progress toward stabilizing their device's performance at a high level. That company, and no doubt others, are taking a keen interest in the near-term prospect of equipping their commercial water heating systems with devices that could save the consumer 30% or more of their electric utility bills. This peaked our interest, especially since we had been told that numerous independent companies and testing agencies had found the same profound, barely believable over-unity performance: Coefficient of Performance or C.O.P. (the ratio of output to input power) in the range 1.2 to as high as 7.0, with most typical operation in the range 1.5 to 2.0

In April, Jed Rothwell and I finally had the great privilege of testing the device on-site in Georgia. Our initial test showed clear over-unity performance at C.O.P = 1.19 to 1.27. See our appended report in this issue, which will also appear in modified form in the ICCF-7 proceedings later this year. We acquired the very unit we tested in Georgia and are preparing to begin a series of even more definitive tests in our laboratory in Bow, New Hampshire. Initial testing here indicated that there might have been some shipment damage that degraded the performance to slightly over-unity (too-close-to-call), but we are not discouraged. Such alteration in performance — due to vapor leaks and air pockets accidentally introduced into the machine, have been common problems of transport in the past. As this issue goes to press in early May, a modified rotor design being tested at Kinetic Heating Systems, is giving performance between C.O.P. 1.7 and 3.4, according to the inventors. We hope

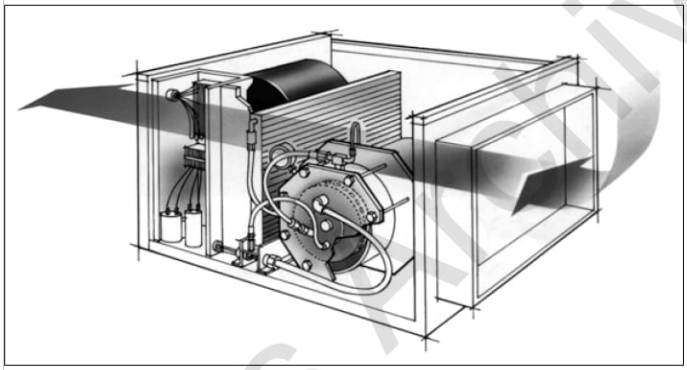

Schematic View of Perkins-Pope Kinetic Furnace Showing Air Flow Around Rotor Chamber, Electric Drive Motor, and Heat Transfer Loops
Diagram Courtesy Kinetic Heating Systems, Inc.

to test this new rotor design here in Bow just as soon as it is shipped, hoping these large numbers will hold up.

Ironically, this Kinetic Furnace technology has emerged completely independently from the HydroSonic Pump™ of HydroDynamics, Inc., which is also in Georgia. Jed Rothwell and I had tested a HydroSonic™ pump in 1993 and had found its steam generation to be clearly over-unity—beyond the electric power input. We have a 75-horsepower unit here in our lab that is optimized to generate hot water. Testing here has been on-hold pending installation of the large electrical feed required to power the machine (provisional permits have been granted by Concord Electric Company). Test data provided by inventor James Griggs shows that this unit produces 15% more energy output than the mechanical input power as measured by a sophisticated in-line dynamometer.

After discovering Griggs and his machine, we had checked out a water cavitation vortex device from Moldova, the Yusmar of

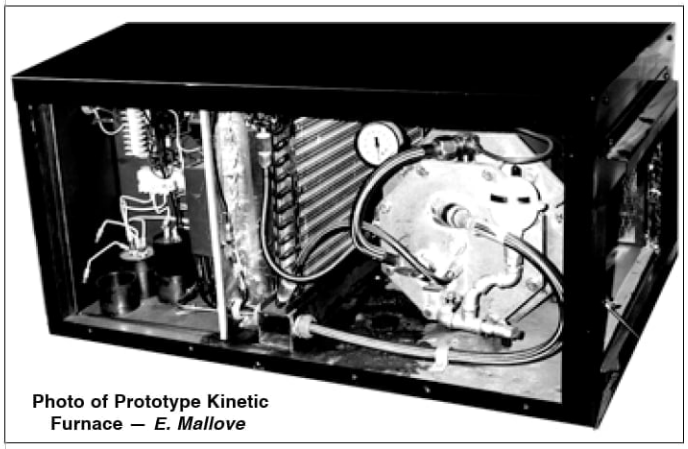

Photo of Prototype Kinetic Furnace — *E. Mallove*

Dr. Y. Potapov, (see *Infinite Energy*, Issues #2 and #3) and had been very disappointed to find no evidence of over-unity performance in its operation, at least under the conditions for which we had tested it. In issue #1 of *Infinite Energy*, Michael Huffman had described his cavitation reactor, for which he now

New Energy Times Archive

Figures 1-6 from U.S. Patent #5,341,768
"Apparatus for Frictionally Heating Liquid"
- The Kinetic Furnace

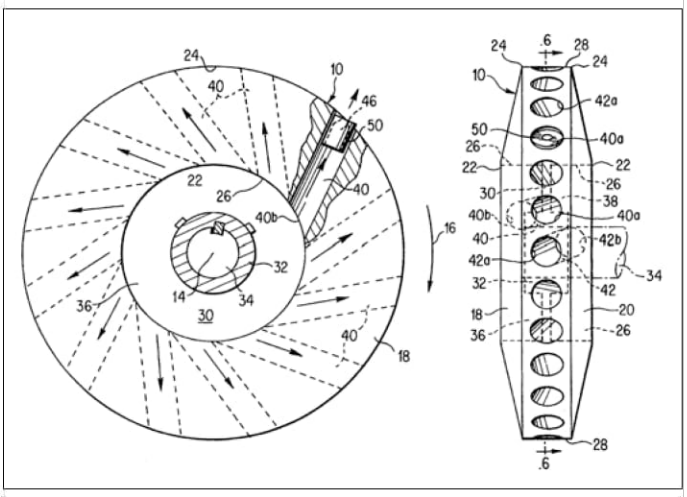

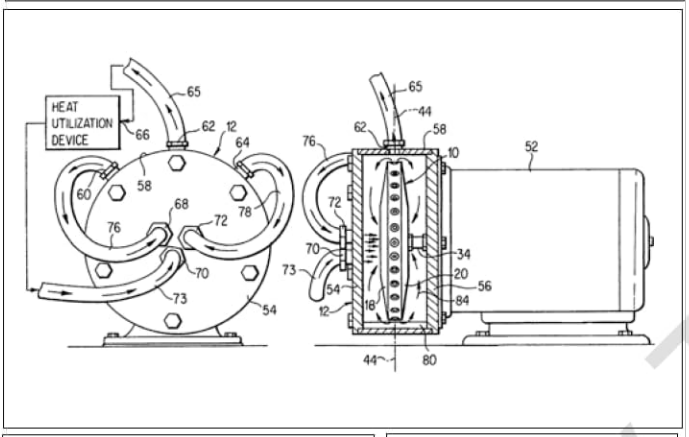

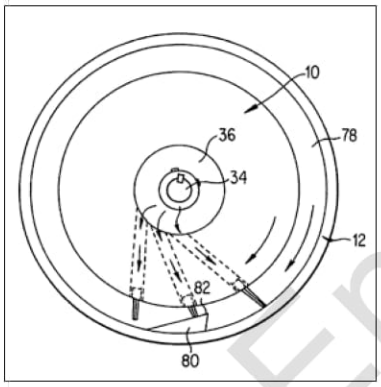

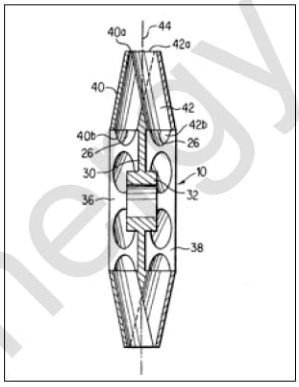

holds a U.S. patent. He is selling small research units, which we have *not* tested (see the Huffman Technology WWW site: http://www.aa.net/~knuke/index.htm).

As long as these devices work and continue to produce their astonishing results, they will continue to stir interest—pun intended, and they will likely be applied technologically for over-unity water heating first, and later perhaps in self-sustaining mode where the steam produced is fed back to a turbine that takes over from the start-up electric motor. But how can cavitation and friction-heating technology fit into a framework that can be accepted by science? Certainly the phenomenon is a radical departure from the sedate electrochemical or gas-loading experiments with which most people in "mainstream" cold fusion are familiar.

If one examines the cavitation technology closely, perhaps it

Kinetic Furnace Inventors Ralph E. Pope (L) and Eugene Perkins
(Photo: by E. Mallove)

is not so great a stretch to see how it might be related to cold fusion. We note in particular that the work of Roger Stringham and Russ George (see their ICCF-7 article reproduced in this issue, as well as Tom Benson's article in *IE* issue #1) shows that excess energy, metal transmutations, and helium production can emerge in ultrasonic activation of metal surfaces in water. These cavitation devices produce ultrasonic sound waves in the fluid, to be sure, which could be catalyzing metal surface nuclear reactions in similar fashion to what Stringham and George have achieved.

We have to laugh at and pity those mainstream scientists working in *sonoluminescence*—light emission from cavitation bubbles—who quite often speculate about whether conditions in their bubbles might reach high enough temperatures to cause thermonuclear fusion. If these ladies and gentlemen would only pause for a moment to consider what technologists and inventors have already developed, perhaps their tune would change. The phenomenon they really should be studying—the massive excess heat—is right under their noses.

A variety of Kinetic Furnace aluminum rotors with steel inserts on display at Kinetic Heating Systems, Inc. The rotors evidence cavitation damage, localized melting, and coatings with material that appears as though it were electro-deposited on the rotor surface. *(Photo: E. Mallove)*

Left: Comparison of fresh aluminum rotor (left) and used rotor (right) of same design, showing thin deposits of unknown materials.
(Photo: Jed Rothwell)

New Energy Times Archive

Preliminary Assessment of the "Kinetic Furnace" of Kinetic Systems, Inc. —An Apparent Massive Excess Energy-Producing Technology Employing Unknown Non-Chemical Reactions of Water in Contact with Metals

by Eugene Mallove and Jed Rothwell

(Adapted from Poster Paper at ICCF-7)

Introduction

Since the announcement by Fleischmann and Pons of anomalous nuclear-scale excess energy in heavy water/palladium and platinum electrochemical cells in 1989, a number of other excess-energy phenomena have emerged. Among them are confirmed reports of excess energy in ordinary-water electrochemical cells, often with a variety of high surface area cathode materials. Excess energy-from-water claims have also included reports of activation of reactions by both ultrasonic transducers and rotary cavitation generators. Linked with all the above have been reports of nuclear reaction products formed at low energy. This indicates that the origin of the excess energy may lie within a previously unidentified category of nuclear reactions.[1]

The Kinetic Furnace is an energy-from-water machine invented and patented by Eugene Perkins and Ralph E. Pope of Kinetic Systems, Inc. of Cumming, Georgia (USA). It has been under development since the early 1980s, predating the Fleischmann-Pons announcement by many years. It produces robust, kilowatt level excess heat. It has been confirmed in independent testing by at least two industrial corporations and at least three independent engineering firms that specialize in measuring the performance of heating and air-conditioning systems. We recently confirmed the excess heat in a preliminary on-site test. We plan to do additional tests with much more sophisticated instrumentation in the near future.

This is a preliminary report to assess the excess energy produced by the Kinetic Furnace and the potential of this technology for new scientific investigations.

History and Patents

The Kinetic Furnace creates heat by generating turbulence and friction within fluid-filled chambers in which a rotor spins in close proximity to stationary surfaces. This generates intense ultrasound. There are a few dozen United States patents on similar machines.[2] However, the development of the Kinetic Furnace, by Eugene Perkins and Ralph Pope, during 18 years of collaboration, has led to the most successful embodiment of such heaters to date. Because the Perkins-Pope device generates kilowatt levels of excess heat, it may turn out to be an excellent test bed for determining the origin of the excess-energy reactions at the subatomic level. The magnitude of the energy release is so immense and sustained that the device can potentially produce large quantities of reaction products for analysis.

The first U.S. Patent, #4,424,797 for "Heating Device" was awarded to Eugene Perkins with Pope as collaborator, January 10, 1984 (filed October 13, 1981). The patent abstract states:

> "A heater for heating a liquid including a housing defining a closed elongated heating chamber therein with a cylindrical chamber surface, a rotor body rotatably journalled in the heating chamber with a cylindrical peripheral surface thereon concentrically of the chamber surface so as to define an annular space between the chamber surface and the peripheral surface on the rotor body, drive means for effecting relative rotation between rotor body and the housing, and pump means for circulating the liquid through the annular space so that the rotation of the rotor body heats the liquid passing through the annular space."

A second generation patent by Perkins, US Patent #4,483,277 "Superheated Liquid Heating System" was granted November 20, 1984 (filed June 2, 1983). A third iteration of the invention

A Kinetic Furnace at Kinetic Heating Systems, Inc., April 10, 1998, the day Jed Rothwell and Gene Mallove arrived for on-site testing. The unit is the black metal box on the table at left. The 12-inch x 12-inch makeshift duct that channels the heated air exhaust for velocity and temperature measurements was fashioned of corrugated cardboard. *(Photo: by E. Mallove)*

appeared in U.S. Patent #4,501,231 by Perkins (filed June 2, 1983), "Heating System with Liquid Pre-Heating." The present embodiment of the device appears in U.S. Patent #5,341,768 (filed Sept. 21, 1993) by Ralph E. Pope of Cumming, Georgia, "Apparatus for Frictionally Heating Liquid." This version of the invention has a rotary pumping element spun by an electric motor within a water-filled chamber (see Figures 1 through 6 of the patent, reproduced on page 16).

Throughout the history of this development, excess energy has been confirmed by independent consulting engineers. This inspired the inventors during difficult times. Obviously, the application of conventionally understood physics prohibits the creation of excess energy in such a simple device. The electric input power would normally exceed the heat output of the device due to the inefficiency of the electric drive motor and, in the limit, the device would approach C.O.P. (Coefficient of Performance; output divided by input) = 1.0. With a normal electric water heater, power input is always slightly greater than the heat added to the water, because of unavoidable heat losses. The C.O.P. approaches 1.0, never reaching or exceeding it. With this device, however, a C.O.P greater than 1.0 is routinely obtained. Extensive testing with water and air flow calorimetry has shown a profoundly significant excess-energy anomaly.

Prior Testing

Compared to most *most* (not *all*) electrochemical cold fusion cells, the Perkins-Pope system is robust: it works consistently on demand. And it produces a much higher absolute excess power; kilowatts versus watts or tens of watts — in a C.O.P. range from 1.2 to 7.0. Some cold fusion cells have a better input to output ratio, however. Indeed, some have operated for extended periods with no input, in "heat-after-death" reactions.

The latest embodiment of the Perkins-Pope device usually operates at a C.O.P. of around 1.5. Excursions to 1.8 are not uncommon. Four kilowatts of electric input power drive a 6 HP-rated AC motor (3450 RPM). Based on previous performance tests, it is expected that the machine can be improved to

New Energy Times Archive

Our new Amprobe DM-II™ Digital recording power meter was attached to the Kinetic Furnace to measure single-phase (nominally 230-volt) input power. The meter recorded data at one-second intervals, averaged from an even more rapid input sampling rate. Data can be down-loaded to a computer for further analysis. *(Photo: by E. Mallove)*

produce a much larger C.O.P. reliably. The inventors understand which parameters must be improved to achieve this. For example, by testing for wear on the steel inserts, they determined that in rotors with 12 holes, often only one or two holes generate ultrasound. If all 12 holes could be "turned on" the rotor would probably produce much more excess energy. Research in fluid dynamics will be needed to address this problem.

The dimensions of the Perkins-Pope unit in its present configuration sheet metal housing are: 67.3 cm W x 44.8 cm H x 113 cm L; its weight is about 90 kg.

The authors tested one Kinetic Furnace on-site in Georgia and have purchased this unit for permanent testing and demonstration to all serious interested parties at its lab facility at the Bow Technologies Center, Bow, New Hampshire.

We intend to post test results openly on the World Wide Web at frequent intervals and work with others to get to the bottom of the energy anomaly. Much work needs to be done. The inventors have agreed to collaborate with the present authors to make sure that C.O.P. > 1.0 is achieved routinely in this initially-purchased unit. Perkins-Pope have already empirically discovered parameters that make the system work and ones that lead to failure.

Reliance Electric of Indiana has tested an earlier prototype of the machine at its facility and determined it was over-unity.[3] Operating units of the General Electric Corporation have found the device to be over-unity. Both of these companies have supplied Kinetic Systems, Inc. with free electric motors to continue their ground-breaking work.[4] These companies did not file formal reports, but other groups have and we will reproduce them in detail in Issue #19 of *Infinite Energy* (May, 1998).[5]

One of the best reports was by Air Techniques, Inc. of Marietta Georgia, which in the fall of 1983 determined after several days of testing that C.O.P.'s of 1.21, 1.54, 1.98, and 1.64 had been conservatively measured. This is a testing company that routinely deals with the evaluation of heating and ventilation systems, which is the type of analysis required on a device of this sort.

Calorimetry is straightforward. The rotor drive motor consumes electricity and heats water in a closed recirculation loop. Part of this water-loop passes through a heat exchanger, which resembles an automobile radiator. An electric air blower motor pushes air across this radiator as well as across the entire rotor and electric motor heating assembly. The air enters a rectangular exit port duct with a 1.0 ft^2 cross section (12 inches x 12 inches). Essentially all the heat produced is transferred to the air. The output of thermal power is determined by measuring the mass flow of air exiting the device and the air temperature increase from the inlet (ambient) value. The specific heat of air was taken from the Dwyer tables. We did not measure barometric pressure in these tests. We used the average value recommended in the Dwyer tables.[6]

Dunn laboratories, Inc. of Atlanta Georgia measured a C.O.P. of 1.54 in testing carried out on December 6, 1982.

Diversified Engineering Services of Dallas, Texas analyzed test results of August 26, 1983 obtained by Dunn laboratories, Inc: 3.38 KW input, 9.96 KW output, for a C.O.P. of 2.95. It commented also on the tests of Cerny and Ivey Engineers, Inc. of July 11, 1983, finding a C.O.P = 1.64.

The Pittsburgh Testing Laboratory (Atlanta office) in August 1986 tested the system and found an average C.O.P. of about 3.1 with an input power of 4.6 kW.

The above list of results is presented here merely to substantiate that a variety of independent testers have found the same general over-unity results. Raw data from these tests will be published and critiqued in a future issue of *Infinite Energy*.

Testing in April 1998

The authors visited the Kinetic Systems, Inc. testing facility in Georgia on April 9, 1998. The day before our arrival, Pope reported that two of their units were operating, one at C.O.P. = 1.32 and the other at 1.38. We tested only one unit, for two and a half hours. We attached an Amprobe DM-II electric power data logger to the single-phase, 230 volt AC motor leads. Samples were recorded at 1 second intervals throughout the entire duration of the test. The approximate average real electric input power, automatically corrected for the power factor was 4.27 kW.

Close-up view of a Kinetic Furnace aluminum rotor of recent design with steel inserts—evidencing cavitation damage and localized melting. *(Photo: E. Mallove)*

After an initial heat-up time of 8 minutes, operation of the cooling fan was initiated. (The input power collection system was active during this 8 minute start-up transient. The total input electrical energy recorded during the entire 2.72 hours of data collection was 11.6 kWH.) The temperature between ambient input air and output air dropped as expected from a ΔT of 22 °F to 14.2 °F within about six minutes. Thereafter the ΔT varied from a low of 13.4 °F to a high of 15.4 °F. In this preliminary test the ΔT was recorded manually in a lab notebook every three to five minutes. In the future it will be recorded automatically on a computer. The average of 31 readings taken at irregular intervals over this period was 14.4 °F with a standard deviation of 0.46 °F.

The air velocity in the exit duct was approximately 1125 feet/minute as measured by a new factory-calibrated electronic anemometer from Davis Instruments: Anemometer/Thermometer Data Logger (Model DTA4000). This confirmed the conventional nine-point average air velocity in the duct as measured by a Dwyer Durablock Manometer and probe.

The average C.O.P. based on the temperature ΔT and average

New Energy Times Archive

input power was 1.19. The peak was 1.27. However, the system was clearly not displaying its full heat generation capability. The side panel had been removed to expose the very hot rotor chamber and radiator (water egress temperature was 170 °F as measured by a dial thermometer in the fluid)—thus there were considerable convective and radiative losses. In future tests we will insulate the machine and its exhaust duct to prevent this and other loses. After the tests, Pope and Perkins determined that there was a small gap between the unit and the cardboard duct, caused by loose duct tape, so it is possible that a significant heat loss was occurring there also.

During this test period voltage, current, temperature and air speed were measured and cross checked with redundant, independent instruments. Air speed, the most difficult parameter to quantify, was measured with two instruments based on different physical principles. It is highly unlikely that a combination of errors produced an artifactual C.O.P. greater than 1.0. More likely, the excess was seriously underestimated.

Future Testing

We will establish a permanently operating test bed machine. We may require more machines for factorial experiments. One of the first priorities will be to examine how the machine performs with heavy water. We will begin by mixing a small amount of heavy water with ordinary water, and then we will increase the concentration in steps. We will test water from a variety of different sources. We will check the rotors for anomalous deposits of metals and we will perform autoradiographs. We will monitor the water for gas build-up, elemental change, and tritium. SEM examination of the rotor surfaces will be useful.

Pope stated that these machines have run continuously for 3 to 4 months at a C.O.P. of ~1.5. It is instructive to apply these numbers and speculate about possible low-energy nuclear reactions. The machine holds approximately 4.7 liters of water in the chamber and heat transfer loop, or ~263 moles. This includes 4.05×10^{-2} moles of D_2O, or 2.44×10^{22} pairs of deuterons. If D-D fusion at the metal surface were the source of the excess energy, there would be 9.13×10^{10} joules of energy available with the reaction path $D + D \rightarrow {}^4He + 23.8$ MeV (thermalized). When the excess power is 1,000 watts thermal, the deuterium fuel would last 9.13×10^7 seconds, or 151 weeks.

The Kinetic Furnace is known to operate for a very long time on a single charge of water. Other nuclear reactions involving hydrogen and rotor metal (mainly aluminum with Fe-alloy for orifice-surround strengthening inserts) might yield an even longer operating period. We emphasize however, that no investigations of the nuclear hypothesis have been performed yet.

It is obvious that sustained 1,000 watt excess energy cannot possibly come from chemical reactions in the chamber. In point of fact, there is no accepted chemical reaction in the chamber (such as from standard water corrosion) that could account for even one minute of 1,000 watt excess power.

Perkins and Pope found that the source of the water is important. Water from different sources has widely varying efficacy. The best water is from a well over 100 meters deep, extending below granite formations. Distilled water produces excess energy, but not as much. Atlanta city water does not produce any excess. These differences are probably due to trace amounts of gas or mineral contamination that either enhance or corrupt the reaction. If these performance differences can be confirmed, they will be an important clue about the nature of the reaction on the microphysical level. It is well known, for example, that the sonoluminescence phenomenon is connected with the gas content of water.

Pope says he has tested fluids other than water in the device to see whether they generate excess energy. He found that various oils used in place of water do not produce excess energy. He tested mineral oil, automobile transmission fluid, and thermo-oil used in pumps (Shell and Exxon). Pure ethylene-glycol does not appear to produce excess energy, but mixtures of ethylene-glycol and water works. Tests with other fluids and with water that does not work constitute control runs. Pope has not calibrated with a joule heater. We plan to do this. We will install a joule heater in the equipment cabinet near the device, turn off the device, and run the joule heater and the air blower at 1, 2, 3, 4 and 5 kilowatt power levels.

The temperature of the water in the chamber has reached as high as 600 °F in some tests, although it usually remains below 200 °F. The cause of occasional sudden rapid rises in temperature is not known. Additional evidence of high heat is seen in the fact that the aluminum rotors sometimes partially melt.

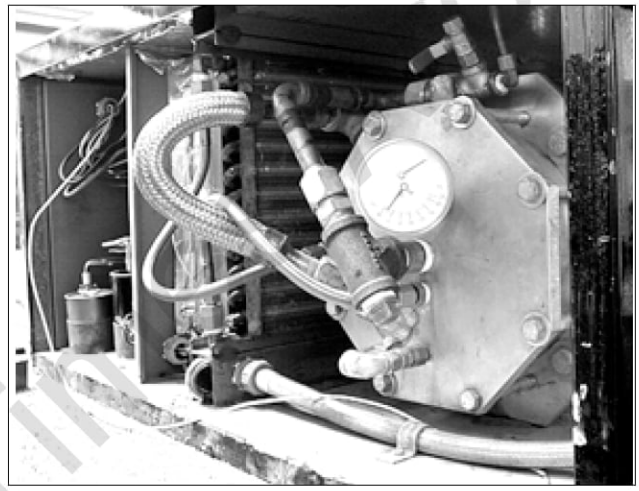

Close-up view of a Kinetic Furnace showing rotor chamber, fluid temperature and pressure gauge, fill valve port on top, heat transfer radiator, braided steel-protected fluid line, and forward electronics bay. *(Photo: Jed Rothwell)*

The rotors are generally made of aluminum, with steel inserts that harden the walls of the peripheral holes. When steel inserts were not used, the aluminum was severely damaged by melting after about 10 minutes of operation. Deposits of copper-colored material have plated onto the aluminum after prolonged use. It is not clear whether these deposits are contaminants from the heat exchanger, steel, aluminum, or the water itself. An EDS (energy dispersive spectroscopy) analysis of the deposit was performed and the following element composition was found:

	Smooth Area of Rotor	Nodule Area of Rotor
Al	74.08 %	73.19%
Cl	0.93	0.74
K	0.15	0.55
Ca	1.03	2.68
Fe	14.52	13.14
Cu	0.95	0.58
Zn	7.82	7.76

A subsurface sample of the aluminum was tested, and only low levels of contamination were found. This analysis was performed by a university chemist who wondered how the material were deposited on the rotor. The material looks as if it was electroplated to the aluminum surface, but there are no known electric currents in the water to drive electrolysis. The analysis of changes in materials before and after the operation of this machine will require considerable effort.

New Energy Times Archive

Conclusion

The Perkins-Pope Kinetic-Furnace produces massive excess energy, as shown by extensive testing over twenty years. It shows great promise as a research tool for investigating the class of reactions that produce nuclear-scale excess energy in more traditional cold fusion cells. The reactions responsible for the excess energy in the Perkins-Pope device may be novel nuclear reactions or the tapping of energy reservoirs that others have proposed (*e.g.* new hydrogen energy states or zero point energy). There is no possibility that this device can be explained by chemical energy or "storage energy." The Perkins-Pope device is also a near term excess energy technology that will have application in water and air heating, and perhaps in self-standing electric power production and rotary mechanical power production.

References and Notes

1. See a list of over 90 references to experimental results in cold fusion (http://www.infinite-energy.com)

2. *Other* U.S. Patents for other "frictional heating" devices:

1,758,207 1930 Walker
2,316,522 1943 Loeffler
2,683,448 1954 Smith
2,991,764 1961 French
3,333,771 1967 Graham
3,402,702 1968 Love
3,508,402 1970 Gray
3,690,302 1972 Reynolds
3,720,372 1973 Jacobs
3,791,349 1974 Schaeffer
3,813,036 1974 Lutz
4,143,369 1979 Frenette
4,147,301 1979 Halma et al
4,153,199 1979 Ellmer
4,226,364 1980 Utsech
4,256,085 1981 Line
4,277,020 1981 Grenier
4,357,931 1982 Wolpert et al
4,372,254 1983 Hildebrandt
4,381,762 1983 Ernst
5,188,090 1993 Griggs (see *Infinite Energy*, Issue #5/6, p. 25-27)
5,279,262 1994 Muehleck
5,419,306 1995 Huffman, Michael (see *Infinite Energy* Issue #1)

3. Chart recorder output provided by Ralph E. Pope

4. Citation by Ralph Pope and Eugene Perkins

5. Partial list of earlier test reports on the Perkins-Pope Kinetic Furnace:

— "Test Report on the Perkins Furnace Evaluation (Test Dates September 28 and October 6, 1983)," Robert J. Synk, P.E., Air Techniques, Inc.

— Dunn Laboratories, Inc., Dec. 14, 1982, and August 26, 1983

— Pittsburgh Testing Laboratory (Atlanta), Report on "Perkins Power Energy System," July 6, 1984, and August 5, 1986.

— Automated Test Labs (Philadelphia), November 18, 1986

6. "Air Velocity Calculator," Dwyer Instruments, Inc., Michigan City, IN 46360

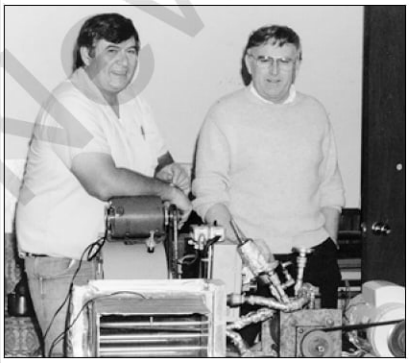

Eugene Perkins (L) and Ralph Pope many years ago with earlier design of their Kinetic Furnace. In the past, calorimetery to establish over-unity was performed on the fluid heat transfer loop, not on an air flow in a duct. *(Courtesy: Kinetic Heating Systems, Inc.)*

(L-R) Eugene Perkins, Ralph Pope and Eugene Mallove at Kinetic Heating Systems, Inc. Mallove is holding console of the Digital Anemometer/ Thermometer/ Datalogger (DTA-4000 from Davis Instruments) purchased for this testing. Its readings agreed closely with the "first principles" Dwyer pressure-based velocity meter (below). *(Photo: Jed Rothwell)*

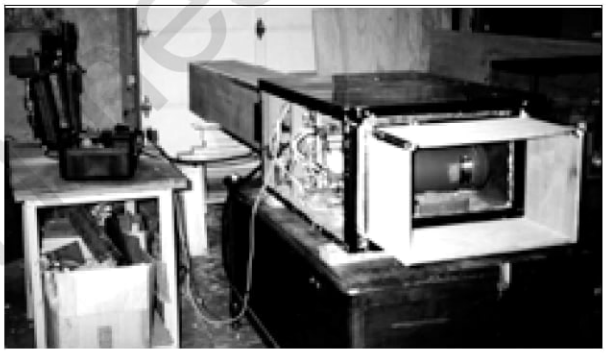

Kinetic Furnace readied for testing at Cold Fusion Technology, Inc. in Bow, New Hampshire—the very same unit tested in Georgia. Amprobe DM-II™ digital recording power meter is attached. Exhaust tunnel (pointing away from camera toward the lab's overhead door) is now of rigid 1/2-inch plywood construction. A short air entrance duct to the KF -- also of plywood— has been added to support an entrance thermocouple and move it away from radiant heating by the rotor and motor. Future testing may have the entire Kinetic Furnace enclosed in a water-flow calorimeter. *(Photo: by E. Mallove)*

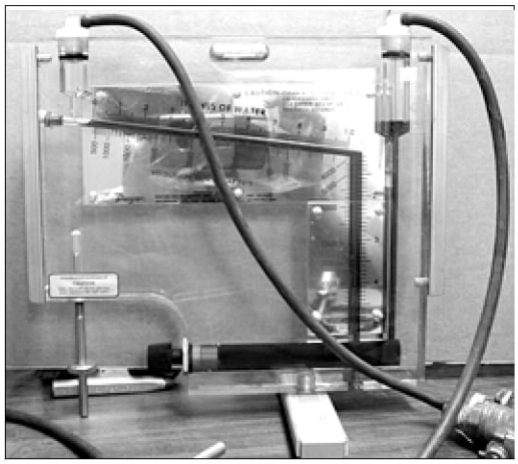

Dwyer pressure-based velocity meter. *(Photo: Jed Rothwell)*

New Energy Times Archive

Ralph Pope at Home with his energetic bishon frise guard-dogs Heidi and Sugar
(Photo: by E. Mallove)

Ralph Pope with "high-tech" Mountain Dew™soda can use to pour water into the rotor.
(Photo: by E. Mallove)

Latest Results on Testing of New Rotor Design for the Kinetic Furnace at Kinetic Systems, Inc.— Reported via fax by Ralph Pope and Eugene Perkins

April 29, 1998: Single rotor, 12 orifices installed, flow control ramp (changed three orifices) + aluminum fin guides (3)
Amps = 19, Volts = 200, Power = 3.8 kW, CFM (air) = 975
Air temperature in: 62 °F; Air Temperature out: 85 °F; ΔT=23 °F
24,383 Btu out; 12,969 Btu in. C.O.P. = 1.88

April 30, 1998: Single rotor, 12 orifices installed
Amps = 19, Volts = 200, Power = 3.8 kW, CFM (air) = 975
Air temperature in: 64 °F; Air Temperature out: 86 °F; ΔT=22 °F
23,166 Btu out; 12,969 Btu in. C.O.P. = 1.79

May 1, 1998: Single rotor, 12 orifices, fins removed, 4-flow control blocks
Amps = 17, Volts = 200, Power = 3.4 kW, CFM (air) = 975
Air temperature in: 59 °F; Air Temperature out: 84 °F; ΔT=25 °F
26,325 Btu out; 11,604 Btu in. C.O.P. = 2.27

May 1, 1998: Single rotor, 12 orifices, fins removed, 4-flow control blocks
Amps = 16.5, Volts = 200, Power = 3.3 kW, CFM (air) = 975
Air temperature in: 64 °F; Air Temperature out: 89 °F; ΔT=25 °F
26,325 Btu out; 11,263 Btu in. C.O.P. = 2.34

May 4, 1998:
Standard rotor (no scoops), 4-flow control blocks
Amps = 15
Air temperature in: 62 °F; Air Temperature out: 88 °F; ΔT=26 °F
26,220 Btu out; 11,946 Btu in. C.O.P. = 2.19

May 5, 1998:
Bottom-line figures for tests today:
C.O.P. = 2.86, 2.82, 3.44

Kinetic Heating Systems, Inc.
—•••—
Cumming, Georgia 30130
Ph: 770-889-8642, 1-800-496-4332
Fax: 770-889-2740

Aspden Patent continued from page 8

This application is filed as a continuation-in-part deriving from U.S. patent application Ser. No. 08/191,381 because the apparatus as described in the specification of that application and its original counterpart U.S. patent application Ser. No. 07/480,816 was presented in the context of its suggested relevance to what has come to be termed 'cold fusion' and it is expressly affirmed that, though the conception of this invention may owe its origin to inspiration connected with that theme, this subject continuation-in-part application application makes no claim dependent upon 'cold fusion'.

The invention concerns electrical apparatus aimed specifically at setting up an orthogonal interaction between a magnetic field and a temperature gradient in an electrical conductor ostensibly for no apparent purpose since this involves power loss. However, by the Nernst Effect, there is then an electric field set up in the conductor in the mutually orthogonal direction and the consequences of this in the apparatus configuration of this invention are a basic research pursuit concerning a certain energy anomaly which gives the invention utility at least as experimental apparatus.

However, notwithstanding the fact that the claims of this specification are not specific to the 'cold fusion' theme, this should not be regarded as a disclaimer of rights should what has come to be known as 'cold fusion' eventually develop as a specific application of the apparatus covered by the claims.

As support justifying this statement and as a matter of documentary record, but without it being part of the detailed patent description needed to support the claims, a commentary is added at the end of this specification as an 'Appendix' aimed at providing some general scientific background. The text of this Appendix was written in October 1993 with the intention of using it as a scientific statement to support a petition to revive the parent U.S. patent application No. 07/480,816. it having been deemed abandoned owing to the Applicant's non-response to an Examiner's communication dated Dec. 16th. 1992. The latter was presumably lost in the Christmas mail load as it was never received by the Applicant in U.K. The appended commentary has not hitherto been disclosed and so cannot be quoted by way of reference to a scientific publication of record...

Although this invention is not directed at the 'cold fusion' theme it will be understood from what has been explained above that the anomalous generation of heat claimed by those involved with 'cold fusion' research and the presence of a positive charge distributed on within a metal conductor when heat and electric current flow combine in a certain way are suggestive. The existence of a positive ion charge balanced by vacuum charge displacement on a microfine scale implies the possibility of two positive ions easily merging owing to the aethereal nature of the negative charge that neutralizes their mutual force interactions.

This will explain why this patent application is linked by continuation with an original patent application filed shortly after the 'cold fusion' scenario was initiated.

A Commentary on the Physics of 'Cold Fusion'

Abstract

This commentary describes the circumstances of the Applicant's background interest in the subject of nuclear structure, particularly with regard to deuterons and proton creation, and a connected research background on anomalous electrodynamic properties associated with current flow in metal at room temperature.

It further explains why there is reason to expect the statistical incidence of physical processes associated with nuclear fusion to be different for action in metal and action in very hot plasma.

Furthermore, since any landmark invention in this field must probe unexplored territory which is not adequately mapped in the accepted and general state of the art, one must be prepared to give credence to physics which is new and unfamiliar. It is a recognized 'state of the art' fact that there are unsolved mysteries in physics. and physicists have at this time no way of denying this Applicant's contention that the mystery which particularly concerns what has come to known as 'cold fusions is the role of the muon, the enigmatic mu-meson. in creating the proton and in promoting its decay.

The Fusion Criteria

In a very hot proton gas protons can combine to create heavier atomic nuclei. This is facilitated if there is something effectively neutralizing the charge repulsion between the protons. A proton or antiproton charge can become neutral if a beta particle of opposite polarity combines with it in some way to be seen as a neutron. Alternatively it is conceivable that in the very energetic field conditions that one can foresee, particularly in the presence of strong gravity fields, the field medium itself can be such as to overcome the mutual repulsion or the medium itself may become electrically polarized to provide a background that can serve as the neutralizing influence. In any event, the high energy physics of the scenario by which protons synthesize heavier forms of matter has to explain why hot fusion occurs and the picture just presented has to be very close to what has just been outlined.

Aspden Patent continues on page 31

New Energy Times Archive

United States Patent

Perkins, Patent Number: 4,424,797
Date of Patent: Jan. 10, 1984

HEATING DEVICE
Inventor: Eugene Perkins, Rte. One,
Dawsonville, Ga. 30534
Appl. No.: 311,0 74
Filed: Oct. 13, 1981
Int. Cl. 3 F24C 9/00
U.S. Cl 126/247; 122/26
Field of Search 126/247, 101; 122/26;
165/86; 188/293; 110/234; 237/8 A, 8 D, 56,
59; 236/9 A, 14, 37; 290/2; 415/90
References Cited
U.S. PATENT DOCUMENTS

2,683,448	7/1954	Smith;	126/247
3,813,036	5/1974	Lutz	126/247 X
4,143,639	3/1979	Frenette	126/247
4,147,301	4/1979	Halma et al	126/101 X
4,153,199	5/1979	Ellmer	126/101 X
4,357,931	11/1982	Wolpert et al	126/247

Primary Examiner—Samuel Scott
Assistant Examiner—Randall L. Green
Attorney, Agent, or Firm—Scrivener, Clarke, Scrivener & Johnson

ABSTRACT

A heater for heating a liquid including a housing defining a closed elongate heating chamber therein with a cylindrical chamber surface, a rotor body rotatably journalled in the heating chamber with a cylindrical peripheral surface thereon concentrically of the chamber surface so as to define an annular space between the chamber surface and the peripheral surface on the rotor body, drive means for effecting relative rotation between the rotor body and the housing, and pump means for circulating the liquid through the annular space so that the rotation of the rotor body heats the liquid passing through the annular space.
1 Claim, 4 Drawing Figures HEATING DEVICE

BACKGROUND OF THE INVENTION

This invention relates generally to liquid heaters and more particularly to a liquid heater which heats liquid by shearing the liquid.

Various attempts have been made in the past to mechanically heat liquids. One type of such mechanical heating device heats the liquid by shearing the liquid between rotary and stationary blades in a chamber. A device of this type is illustrated in U.S. Pat. No. 2,683,448. This type of heating device creates a high degree of turbulence in the liquid passing through the device to be heated and consumes a large amount of power in driving the rotary blades in the chamber. As a result, the heating efficiency of this type of device is relatively low.

In another type of these prior art devices, the heat to heat the liquid is generated by the frictional contact between rotating and non-rotating members. Examples of this type of heating device are illustrated in U.S. Pat. Nos. 2,625,929; 3,164,147; and 3,402,702. The problems with this type of heating device are that a large amount of power is consumed in generating the frictional heat, and excessive wear is encountered between the surfaces of frictional contact with each other within the heating unit.

SUMMARY OF THE INVENTION

These and other problems and disadvantages associated with the prior art are overcome by the invention disclosed herein by providing a heating unit which uses a cylindrical rotor rotating in a cylindrical heating chamber so that the flow of liquid in the chamber is laminar rather than turbulent and with the rotor and chamber not being in contact with each other so that frictional losses within the heating unit are minimized. It has been found that sufficient liquid shear is generated by the rotating rotor in the heating chamber so that the liquid is heated, yet the power consumption associated therewith is minimized so that the heating efficiency of the unit is maximized.

The apparatus of the invention includes a heating unit which may be

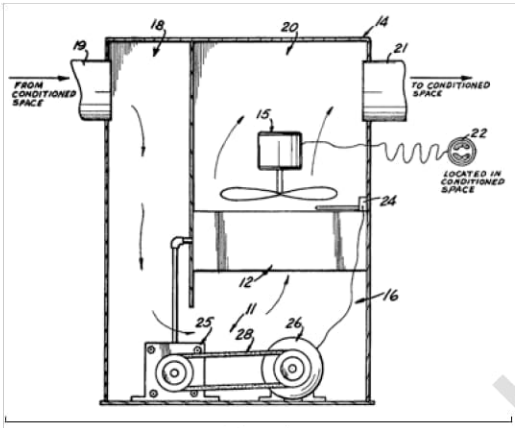

Figure 1

incorporated in a heating system adapted to heat air in a prescribed space such as a building or residence. The heating unit includes a housing which defines an elongate heating chamber therein with a cylindrical chamber surface. A rotor body is rotatably mounted in the heating chamber and defines a cylindrical peripheral surface thereon concentric with respect to the cylindrical chamber surface. The peripheral surface on the rotor has an outside diameter a prescribed amount smaller than the inside diameter of the chamber so as to define an annular space between the rotor body and the chamber through which the liquid to be heated is passed. Drive means is provided for effecting relative rotation between the rotor and the housing and pump means is provided for circulating the liquid through the annular space between the rotor and the chamber as the rotor is rotated so that the liquid is heated due to the shear of the liquid in the annular space between the rotor body and the chamber. In the embodiment of the invention shown, the pump impeller for circulating the I liquid through the chamber is mounted on the rotor so that the drive means simultaneously rotates the pump impeller and the rotor.

When the heating unit is incorporated in a heating system, the liquid heated by the heating unit is passed through an air-to-liquid heat exchanger through which the air to be heated is also passed so that the air is heated as it passes through the heat exchanger. The operation of the heating unit is controlled so as to maintain the temperature of the air exiting the heat exchanger within a prescribed temperature range while the operation of the fan circulating the air through the heat exchanger is controlled in response to the temperature of the air in the conditioned space so as to maintain the temperature of the air in the conditioned space within a prescribed temperature range.

These and other features and advantages of the invention will come more apparent upon consideration of the following description and accompanying drawings wherein like characters of reference designate corresponding parts throughout the several views and in which:

BRIEF DESCRIPTION OF THE DRAWINGS

FIG. 1 is a view illustrating the invention incorporated in a heating system

FIG. 2 is a longitudinal cross-sectional view of the heating unit of the invention;

FIG. 3 is a transverse cross-sectional view taken generally along line 3—3 in FIG. 2; and

FIG. 4 is a transverse cross-sectional view taken generally along line 4—4 in FIG. 2.

These figures and the following detailed description disclose specific embodiments of the invention; however, it it to be understood that the inventive concept is not limited thereto since it may be incorporated in other forms.

DETAILED DESCRIPTION OF ILLUSTRATIVE EMBODIMENTS

Referring to FIG. 1, it will be seen that the invention is embodied in a heating system 10 used to heat air in a space to be conditioned such as a building or residence. The heating system 10 includes generally a heating unit 11 connected to a liquid-to-air heat exchanger 12. The liquid-to-air heat exchanger 12 is housed in an appropriate duct system 14 adapted to supply air from the space to be conditioned to the heat exchanger 12 and to deliver air from the heat exchanger 12 back to the space to be conditioned. A fan 15 is provided in the duct system 14 for forcing the air from the space to be conditioned through the duct system 14 and the heat exchanger 12.

The heating unit 11 is also illustrated housed in the duct system 14 although it is understood that it may be located remotely thereof.

New Energy Times Archive

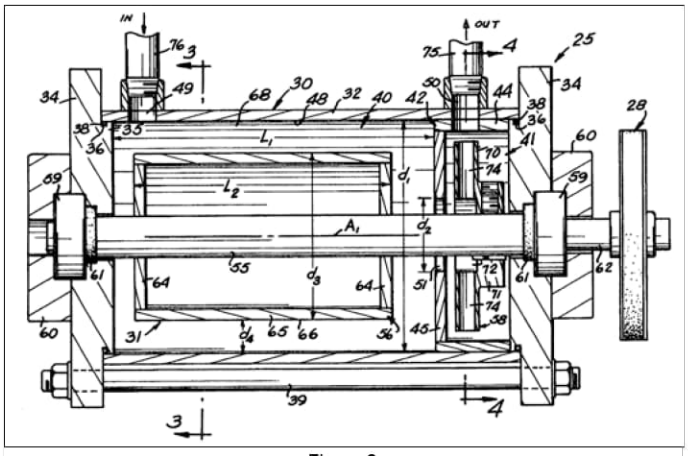

Figure 2

The duct system 14 defines a heat exchanger chamber 16 therein in which the liquid-to-air heat exchanger 12 is mounted with an intake plenum 18 connected to the space to be conditioned by an appropriate return duct 19 so that the air from the space to be conditioned is supplied to the heat exchanger chamber 16 through the intake plenum 18. The air passing from the intake plenum 18 through the heat exchanger 12 in the chamber 16 passes out through a supply plenum 20 connected to the space to be conditioned by the supply duct 21 to supply the heated air back to the space to be conditioned. The fan 15 is located in the heat exchanger chamber 16 so that the fan 15 forces the air from the intake plenum 18 through the heat exchanger 12 in the chamber 16 and out through the supply plenum 20. It will be noted that the heat exchanger 12 extends completely across the chamber 16 so that all of the air passing from the intake plenum 18 to the supply plenum 20 must pass through the heat exchanger 12.

The operation of the fan 15 is controlled by thermostatic switch 22 which is located in the space to be conditioned so that when the temperature of the air in the space to be conditioned drops below a prescribed value, the switch 22 operates fan 15 to circulate air from the space to be conditioned through the heat exchanger 12 until the air in the space to be conditioned has been raised to a higher prescribed value. Such thermostatic switches 22 are conventional and need not be described in detail. As will become more apparent, the operation of the heating unit 11 is controlled by a thermostatic switch 24 located at the air exit side of the heat exchanger 12 as will become more apparent. The thermostatic switch 24 serves to activate the heating unit 11 when the air exiting the heat exchanger 12 drops to a prescribed lower temperature to heat a liquid and supply the liquid to heat exchanger 12 until the temperature a of the air exiting the heat exchanger 12 has been raised to a prescribed higher temperature.

The heating unit 11 is illustrated mounted in the heat exchanger chamber 16 under the heat exchanger 12 and includes a liquid heater 25 driven by drive motor 26. In, the particular embodiment shown, the drive motor 26 is connected to the liquid heater 25 through a bell and pulley arrangement 28. It is to be understood, however, that the drive motor 26 may be directly connected to the liquid heater 25.

As best seen in FIGS. 2-4, the liquid heater 25 includes a housing 30 in which is rotatably mounted a rotor assembly 31. The housing 30 is fixedly mounted in the heat exchanger chamber 16 while the rotor assembly 31 is rotated by the drive motor 26.

The housing 30 includes a cylindrical side wall 32 closed at opposite ends by end plates 34. Each of the end plates 34 defines a cylindrical projection 35 thereon which fits within the cylindrical side wall 32 and is provided with an annular groove 36 therearound which receives an O-ring 38 therein to seal the end plate 34 to the inside of the side wall 32. The end plates 34 are held in position by tie bolts 39 so that the closed chamber is defined by the side wall 32 and end plates 34. This chamber is divided into a heating chamber 40 and a pumping chamber 41 by a divider assembly 42. The divider assembly 42 includes an annular spacer wall 44 having an outside diameter so that it will snugly fit within the side walls 32 adjacent one of the end plates 34 so that spacer wall 44 projects a prescribed distance away from the end plate 34. The projecting end of the spacer wall 44 is closed by a circular end plate 45 so that the pumping chamber 41 is defined between the end plate 45, spacer wall 44, and the end plate 34 against which the spacer wall 44 abuts. The heating chamber 40 is thus defined between the end plate 45, the end plate 34 opposite that against which the divider assembly 42 abuts and the housing side wall 32. The heating chamber 40 has a diameter d1 defined by the inside surface 48 of the side wall 32 and a length 11 defined between the end plate 34 and the end plate 45. The side wall 32 defines an inlet opening 49 therethrough to the chamber 40 adjacent that end plate 34 opposite the divider assembly 42 while the spacer wall 44 and side wall 32 define a common outlet opening 50 therethrough which communicates with the pumping chamber 41. The circular end plate 45 on the divider assembly 42 defines a transfer opening 51 therethrough about the central axis Al of the chambers 40 and 41 of diameter d2 so that the heating chamber 40 communicates with the pumping chamber 41 as will become more apparent.

The rotor assembly 31 includes a support shaft 55 which mounts a rotor body 56 thereon at one position along the length of the shaft 55 and a pump impeller 58 at another position along the support shaft 55. The rotor assembly 31 is mounted in the housing 30 so that the support shaft extends coaxially of the axis Al with the rotor body 56 located in the heating chamber 40 while the pump impeller 58 is located in the pumping chamber 41. The support shaft 55 extends through the transfer opening 51 through the end plate 45 in clearance therewith so that liquid can pass from the heating chamber 40 into the pumping chamber 41 and extends out through the end plates 34 through appropriate openings therein. The shaft 55 is rotatably journalled in bearings 59 mounted on each of the end plates 34 and held in position by retainers 60 on the outside of the end plates 34. A seal 61 is provided around shaft 55 immediately inboard of each of the bearings 59 to prevent liquid from passing out of the housing 30 around the shaft 55 at the end plates 34. The shaft 55 is provided with a drive projection 62 which extends out of the housing 30 through one of the retainers 60 so that the belt and pulley arrangement 28 can be connected thereto to rotate the support shaft 55.

The rotor body 56 is hollow and includes a pair of spaced apart washer-shaped end plates 64 which are fixedly attached to that portion of the support shaft 55 within the heating chamber 40 with one of the end plates 64 spaced inwardly of the end plate 34 and the other end plate 64 being spaced inwardly of the end plate 45. The end plates 64 are connected by an annular rotor side wall 65 which extends therebetween with the side wall 65 being fixedly attached to the end plates 64 and the end plates 64 being fixedly attached to the support shaft 55 so that the rotor body 56 rotates with the support shaft 55. The rotor side wall 65 defines a peripheral surface 66 thereon which is cylindrical and located concen-

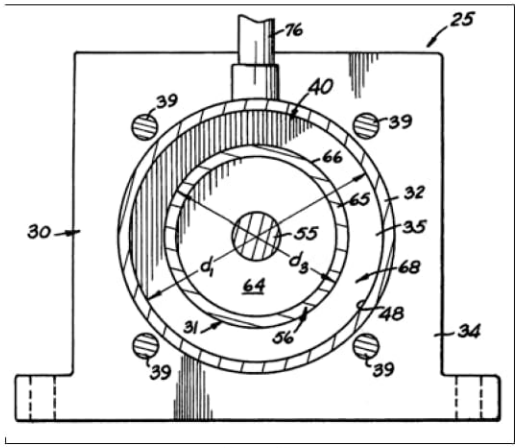

Figure 3

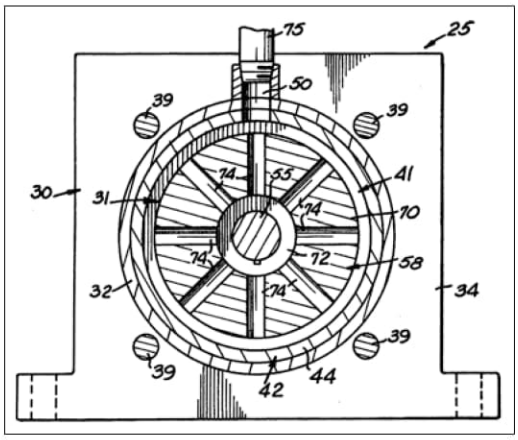

Figure 4

Now Entered Firmes Archive

trically of the central axis A_1 of the heating chamber 40. The surface 66 has a diameter d_3 which is a prescribed amount less than the inside diameter of the surface 48 so that surfaces 66 and 48 defines an annular space 68 therebetween of a radial distance d_4. The surface 66 has a length L_2 shorter than the length of the heating chamber 40.

The pump impeller 58 is fixedly attached to that portion of the support shaft 55 within the pumping chamber 41 and includes a disk portion 70 oriented perpendicular to the axis A_1 with an outside diameter slightly smaller than the inside diameter of the spacer wall 44 so that the pump impeller 58 is freely rotatable with shaft 55 in the pumping chamber 41. The pump impeller 58 also in eludes an attachment portion 71 used to attach the pump impeller 58 to the support shaft 55 through an appropriate key arrangement. The disk portion 70 defines a centrally located counterbore 72 therein which opens onto that side of the disk portion 70 facing the circular end plate 45. The counterbore 72 has a diameter larger than that of the support shaft 55 to define an annular cavity in the disk portion 70 around the shaft 55. The disk portion 70 further defines a plurality of radially extending passages 74 therein which open at their inboard ends into the counterbore 72 and open at their outboard ends into the outer periphery of the disk portion 70. The pump impeller 58 is attached to the support shaft 55 so that the passages 70 are aligned with the outlet opening 5O as they rotate within the pumping chamber 41. It will be seen that the diameter of the transfer opening 51 and the diameter of the counterbore 72 are such that 1liquid can freely pass from the heating chamber 40 through the transfer opening S1 and into the counterbore 72 80 that the liquid will be forced outwardly along the passages 74 as the pump impeller 58 is rotated with the support shaft 55. As will become more apparent, this serves to force the liquid out of the housing 30 through the outlet opening 50. The outlet opening 50 is connected to one side of the heat exchanger through a supply pipe 75 while the inlet opening 49 to the housing 30 is connected to the other side of the heat exchanger through the return pipe 76.

In operation, it will be seen that the heating chambe 40 and the pumping chamber 41 as well as the passage through the heat exchanger and the pipe 75 and 76 are filled with a liquid to be heated such as water. When the drive motor 26 rotates the rotor assembly 31, this causes the rotor body 56 to be rotated in the heating chamber 2 40 while the pump impeller 58 is rotated in the pumping chamber 41. The pump impeller 58 pumps the liquid through the liquid heater 25 to the heat exchanger 12 and then back to the liquid heater 25 so that the heating chamber 40 and pumping chamber 41 remain filled with 2 liquid at all times. As the rotor body 56 is rotated via the drive motor 26, the liquid at the cylindrical peripheral surface 66 on the rotor body 56 tries to move with the rotor body 56 while the liquid at the inside surface 48 on side wall 32 tries to remain stationary. This establishes a 3 velocity gradient in the liquid across the annular space 68 between the rotor body 56 and the inside surface 48 of the side wall 32 to establish shear forces within this liquid. These shear forces cause the liquid to be heated. The velocity profile across the annular space 68 is such 3 that the liquid in the annular space 68 remains in the laminar flow region so as to minimize the power consumption of the liquid heater 25. Thus, it will be seen that the liquid in the annular space 68 is being moved longitudinally of the annular space 68 by the pump 4 impeller 58 while the liquid is moving circumferentially about the space 68 by the rotor body 56. This heats the liquid in the annular space 68 as it flows therealong and then flows out of the heating chamber 40 into the pumping chamber 41 where the pump impeller 58 pumps the 4 liquid through the heat exchanger 12 so that the heat from the liquid can be transferred to the air passing through the heat exchanger 12.

It has been found that the temperature to which the liquid can be heated in the annular space 68 is dependent 5 on the relative velocity of the cylindrical peripheral surface 66 with respect to the inside surface 48 on the side wall 32. When water is used as the liquid, rotating surface 66 at a velocity of about 1150 feet per minute heats the water to a temperature of about 140° F. rotating surface 66 at a velocity of about 1800 feet per minute heats the water to about 165°F and rotating surface 66 at a velocity of about 2550 feet per minute heats the water to a temperature of about 210. F. Thus, it will be seen that the temperature to which the water can be f heated can be adjusted by adjusting the rotational speed of the rotor body 56 to adjust the velocity of the peripheral surface 66 on the rotor body 56.

The radial distance d_4 of the annual space 68 affects the volume of liquid that will be heated by the rotating rotor body 56 at any one time. Distances of 0.06-1.0 inch for the distances d4 have been found practical to reasonably heat the liquid passing through the annular space 68. A distance d_4 of about 0.75 inch has been found preferable to heat the liquid at a flow rate of about two gallons per minute.

The heating rate capacity of the liquid heater 25 is also dependent on the velocity of the cylindrical peripheral surface 66 on the rotor body 56. When water was used as the liquid to be heated, a velocity of about 1800 feet per minute generated about 19,000 BTU per hour whereas rotating the surface 66 at a velocity of about 2550 feet per minute generated about 25,500 BTU per hour. The volume of liquid in the liquid heater 25 and the system of the heat exchanger 12 and the liquid heater 25 should be such that the air passing through the heat exchanger 12 at a prescribed volumetric rate can be heated over the desired temperature differential. It is found that liquid heater 25 holding about one gallon of liquid with the system holding about three gallons of liquid is sufficient to heat air passing through the heat exchanger 12 at a volumetric rate of about 300 cfm about 40 -80° F. with a temperature differential in the liquid passing through the heat exchanger 12 of about 15-20° F.

In the system illustrated, the diameter d~ is about 5.5 inches, the diameter d3 is about 4 inches, and the length L2 of the surface 66 is about 6 inches. The drive motor 26 operates from a 115 volt power source and draws about 5.5 amps to rotate the rotor assembly 31 at about 2400 rpm to move the peripheral surface 66 on the rotor body 56 at a velocity of about 2550 feet per minute. Thus, the drive motor 26 has a power consumption of about 0.6 kilowatt per hour to produce a heating output of about 25,500 BTU per hour. In the above system, the fan 15 was operated to force air through the heat exchanger 12 at a flow rate of about 300 cfm. With the rotor assembly 31 rotating at about 2400 rpm, the air passing through the treat exchanger 12 was heated from a temperature of about 60° F. to a temperature of 100-145° F. while the water temperature supplied to the heat exchanger 12 from the liquid heater 25 was at a temperature of about 210. F. and the temperature of the water returned to the liquid heater 25 from the heat exchanger 12 is at a temperature of about 185° F. At this rotational speed, the pump impeller 58 was pumping the water at a flow rate of about 2 8gpm with a pressure differential of about 0.5 psi across the impeller 58. The thermostatic switch 22 in the space to be conditioned was set to maintain the temperature of the air in the space at about 71° F. while the thermostatic switch 24 was set to start operation of the liquid heater 25 when the temperature of the air exiting the heat exchanger 12 dropped to about 100° F. and to stop operation of the liquid heater 25 when the temperature of the air exiting the heat exchanger 12 reached about 140° F. Typically, the operating cycle for the fan 15 was about 10-12 minutes with the liquid heater 25 being operated for about two cycles of 1-2 minutes each during each operating cycle of the fan.

What is claimed as invention is:

1. Apparatus for heating a liquid comprising:

(a) a housing having an internal chamber bounded by a cylindrical wall and end walls,

(b) a second chamber bounded by a cylindrical wall and end walls and being co-axial with the first chamber and communicating with the first chamber for free movement of liquid between them,

(c) a rotatably mounted shaft extending axially through the two chambers,

d) a rotor mounted on the shaft within the first chamber and having a cylindrical surface spaced inwardly of the cylindrical surface of the chamber having a space between the cylindrical walls to be filled by a liquid,

(e) a pump mounted on the shaft in the second chamber,

(f) a fluid inlet port opening into the rotor chamber, and a fluid outlet port opening from the pump chamber,

(g) a liquid filling the rotor chamber and the pump chamber,.and

(h) means for rotating the shaft, the rotor and the pump.

"Fooling around with alternating current is just a waste of time. Nobody will ever use it, ever. It's too dangerous... It could kill a man as quick as a bolt of lightning. Direct current is save."

Thomas Alva Edison, 1889

New Energy Times Archive

United States Patent

Pope, Patent Number: 5,341,768
Date of Patent: Aug. 30,1994

APPARATUS FOR Frictionally
HEATING LIQUID
Inventor: Ralph E. Pope, Cumming, Ga.
Assignee: Kinetic Systems, Inc, Lynn, N.C.
Appl. No.: 124,019
Filed: Sep. 21, 1993
Int. Cl. 5 F24C 9/00
U.S.Cl. 122/26; 126/247
Field of Search 122/26; 126/247; 237/1 R; 415/71, 120, 143, 206

References Cited
U.S. PATENT DOCUMENTS
3,333,771 8/1967 Graham, 4,143,639 3/1979 Frenette
4,256,085 3/1981 Line, 4,277,020 7/1981 Grenier
4,357,931 11/1982 Wolpert et al., 4,372,254 2/1983 Hildebrandt
4,424,797 1/1984 Perkins, 4,483,277 11/1984 Perkins
4,501,231 2/1985 Perkins, 4,651,681 3/1987 Perkins
4,779,575 10/1988 Perkins, 4,798,176 1/1989 Perkins
5,279,262 1/1994 Muehleck....122/26

Primary Examiner—Edward G. Favors; Attorney, Agent, or Firm—Oblon, Spivak, McClelland, Maier &: Neustadt

A heater for heating liquid by friction includes a rotor rotatable within a housing filled with liquid, the rotor having passages arranged to expel liquid through friction orifices by centrifugal force from a pair of inlet cavities on opposite sides of the rotor. The outlets of the passages lie in a common plane on the periphery of the rotor whereas the inlets of alternate passages open alternately into the respective inlet cavities. The housing has a plurality of outlets Iying in the plane of the rotor outlets with one of the housing outlets leading to a heat utilization device while the other housing outlets are connected to by-pass passages leading back into the housing through the side or sides thereof. The constant in-flow from the by-pass passages virtually eliminates cavitation while the pre-heated liquid in the passages adds to the heat of the liquid in the housing otherwise frictionally heated by rotation of the rotor.
10 Claims, 3 Drawing Sheets APPARATUS FOR FRICTIONALLY HEATING LIQUID

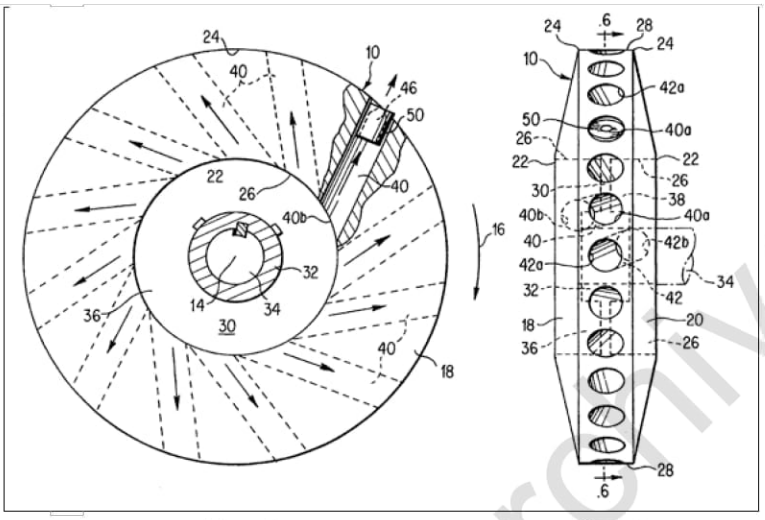

Figure 1 Figure 2

FIELD OF THE INVENTION

This invention relates to liquid heating apparatus and more particularly to apparatus which heats liquid by friction.

BACKGROUND OF THE INVENTION

It is known to heat liquid by rotating a rotor in a reservoir of liquid, such an arrangement being shown in the patent to Perkins U.S. Pat. No. 4,798,176 assigned to the same assignee as the present application. In that patent scoops at the periphery of a rotor pick-up liquid as the rotor is rotated and direct the liquid through inwardly directed passages in the rotor to a central outlet cavity in the rotor which is in open communication with a central outlet port in the rotor housing. This arrangement was found to deal satisfactorily with cavitation problems but the liquid driven inwardly was opposed by centrifugal force tending to drive the liquid outwardly. In other words, though the arrangement addressed cavitation problem, it clearly was not as efficient as it could have been.

Another arrangement for preventing cavitation while taking advantage of centrifugal force is shown in a patent to Perkins U.S. Pat. No. 4,779,575. That patent involves the use of pump means which delivers liquid to a central cavity in a rotor from which liquid is expelled: by centrifugal force through passages in the rotor to its periphery whence the liquid flows through an outlet in the rotor housing to a heat utilization device. Because the pump operated on the scoop principal similar to the rotor in U.S. Pat. No. 4,798,176 the pumped liquid was again subject to opposing forces tending to reduce the overall efficiency of the heater.

The broad object of the present invention is to provide a heater for heating liquid by friction but with enhanced efficiency over prior systems.

SUMMARY OF THE INVENTION

The invention provides a single heating rotor having a pair of central inlet cavities on opposite sides of a central web. A plurality of passages, say 24, having 4 restrictive orifices therein, are arranged in the rotor angularly related to its axis of rotation in a manner inducing them to impel liquid with great centrifugal force through the restricted orifices thereby frictionally heating the liquid. The passages have outlets circumferentially spaced on the periphery of the rotor and lying in a plane bisecting the rotor. The rotor is rotated by an outside power source in a housing filled with liquid and having a plurality of outlets also Iying in the plane bisecting the rotor. Alternate rotor passages, say every 5 other one of 24 or 12, have inlets connecting alternate outlets with one inlet cavity. The other alternate passages, also 12 in number, have inlets connecting the other alternate outlets to the second inlet cavity. One of the outlets from the housing leads to a heat uti.ization 6 device, say, a heat exchanger. There are also a plurality of inlets in one or both sides of the housing, one of the inlets being connected to an outlet of the heat utilization device and the other inlets being connected by by-pass passages to the other outlets in the housing. The pumping capacity of the rotor exceeds the capacity of the outlet leading to the heat utilization device. The excess liquid which is thus pumped flows freely through the other outlets and by-pass passages which relieves pressure in the housing, thus reducing driving power requirements while also reducing the chance of cavitation, which is further reduced, nearly to zero, due to the constant in-flow of liquid from both the heat utilization device and the by-pass passages. Further, the preheated liquid in the by-pass passages flowing into the housing continuously adds to the heat generated in the liquid by action of the rotor. It has been found that the overall efficiency of the arrangement of the present invention is markedly improved over the efficiency of previously known systems.

BRIEF DESCRIPTION OF THE DRAWINGS

FIG. 1 is a vertical elevation, partly broken away of one side of a rotor constructed in accordance with the invention, the opposite side of the rotor being essentially a mirror image of the rotor as shown in FIG. 1;

FIG. 2 is a side elevation of the rotor of FIG. 1;

FIG. 3 is an end elevational view on a reduced scale of a rotor housing incorporating the invention;

FIG. 4 is a side view partly in section and partly in elevation of the assembly of FIG. 3 and including a driving motor;

FIG. 5 is an end view of the rotor and housing with parts omitted, including a side of the rotor housing, illustrating a friction-increasing liquid shearing ramp which may be used with the rotor-of the invention; and

FIG. 6 is a vertical cross sectional view, partly schematic, illustrating the arrangement of liquid passages within the rotor.

DETAILED DESCRIPTION OF THE INVENTION

With reference to FIGS. 1 and 2 the liquid heating apparatus of the invention comprises an impeller or rotor 10, broadly designated by the numeral 10, designed to be disposed within a housing 12, (FIGS. 3 and 4) defining a reservoir for a heat transfer liquid. The rotor 10 is rotatable about an axis of rotation 14 in a predetermined direction as indicated by the arrow 16. The rotor 10 comprises axially spaced front and rear annular face members 18, 20 each having radially spaced inner and outer

New Energy Times Archive

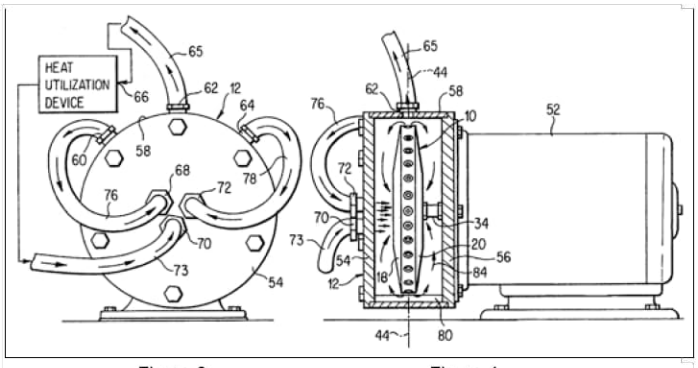

Figure 3 Figure 4

edges 22, 24. radially spaced inner and outer cylindrical surfaces 26, 28 of predetermined axial width join the respective inner and outer edges 22, 24 of the face members 18, 20.

A web 30 having an axial width substantially less than the axial width of the inner cylindrical surface 26 (see FIG. 2) is fixed to the surface 26 midway of the width thereof, the web 30 being provided with a central collar 32 for receiving a rotor driving shaft 34. The web 30 with the inner cylindrical surface 26 on either side of the web define first and second annular inlet cavities 36, 38 in the rotor.

A plurality of fluid transfer passages 40, 42 are provided in the rotor 10, which for purposes of illustration, may total 24 one-half of the total number, say passages 40 numbering 12, lead to the first inlet cavity 36 and the remaining passages 42 lead to the second inlet cavity 38. As can be seen in FIGS. 2 and 6, the passages 40, 42 have outlets 40a, 42a lie symmetrically in common plane 44 bisecting the rotor end an of which are equally circumferentially spaced around and opening through the outer cylindrical surface 28 as should be clear in FIGS. 2. Alternate ones of the passages, say the passages 40, have inlets 40b opening through the inner cylindrical surface 26 on one side of the web 30 to connect the alternate ones of the outlets 40a with the first inlet cavity 36. The other alternate ones of the passage 42 have inlets 42b opening through the inner cylindrical surface 26 on the other side of the web 30 to connect said other alternate outlets 42a with the second inlet cavity 38.

The invention is dependent, in part, on the ability of the rotor to pump past its periphery an amount of liquid in excess of a receiver's capacity to accept the quantity pumped, as will become apparent hereinafter. To provide this excess pumping capacity a large number of liquid transfer passages 40, 42 are required in the rotor and though there is space on the peripheral cylindrical surface 28 for the passage outlets 40a, 42a there is not sufficient space on the inner peripheral surface 26 for all the inlets 40b, 42b. Thus, in accordance with the invention, the respective alternate passages 40, 42 are alternately axially sloped as shown in FIG. C so that their respective inlets 40b, 42b are located in the respective inlet cavities 36, 38 whereas their outlets 40a, 40b lie symmetrically in the plane 44 bisecting the rotor, see FIG. 4.

As can be seen in FIG. 1 the passages 40, and also the passages 42, hidden in FIG. 1 to reduce confusion, all slope generally with respect to the axis of rotation 14 of the rotor in a direction opposite to the predetermined direction 16 of rotor rotation. Thus liquid in the passages 40 (and 42) are impelled through the passages with high centrifugal force. In order to cause liquid flowing through said passages to become frictionally heated each passage 40, 42 is provided along its length, preferably at its outlets, with a restricted orifice 46 which may be formed in a threaded insert 50, only one such insert being shown in FIG. 1 though an passages have identical inserts.

Referring now to FIGS. 3 and 4, the rotor 10 is disposed within the housing 12 with means, such as the motor 52 being provided to rotate the rotor 10 through shaft 34 in the predetermined direction 16. The housing has a pair of axially spaced end walls 54, 56 joined by a cylindrical side wall 58 whose internal diameter is substantially complementary to the diameter of the rotor 10. As best seen in FIG. 3 there are a plurality of outlets 60, 62, 64 through the side wall 58. At least one outlet, in this case outlet 62, leads by way of pipe 65 to an inlet of a heat utilization device 66, which may be a heat exchanger.

In accordance with the invention, inlets 68, 70, 72 are provided through at least one end wall, in this case end wall 54 though, should the drive motor 52 be spaced to the right of rotor housing 12, one or more inlets could also be located in end wall 56. The number of inlets 68, 70, 72 are equal in number to the outlets CO, C2, 64 and at least one of the inlets, say inlet 70, is connected by a pipe 73 to the outlet of the heat utilization device 66, with by-pass passages 76, 78 connecting the other outlets 60, 64 with corresponding inlets 68, 72. There could be additional by-passages.

As is evident in FIG. 4, all of the outlets 60, 62, 64 through the side wall 58 of the rotor housing 12 lie in the same plane 44 bisecting the rotor whereby as the rotor rotates the outlets 40a, 42a of the passages 40, 42 in the rotor successively align with the housing outlets 60, 62, 64 to project liquid from the rotor outlets directly into the housing outlets.

As can be seen in FIG. 5 the outer diameter of the rotor 10 is less than the inner diameter of the housing 12 to provide an annular space 78 between the housing and rotor. At least one wedge shaped ramp 80 is fixed to the housing in the space 78 and has an edge 82 terminating in close adjacency to the periphery of the rotor whereby the ramp further frictionally heats the liquid through shearing action as liquid is impelled through the passages 40, 42 in the rotor. Desirably, the ramp's wedge shape diverges in a direction opposite to the predetermined direction of rotation of the rotor but it is within the purview of the invention for the wedge shape to diverge in the direction of rotor rotation. Furthermore, there can be more than one ramp.

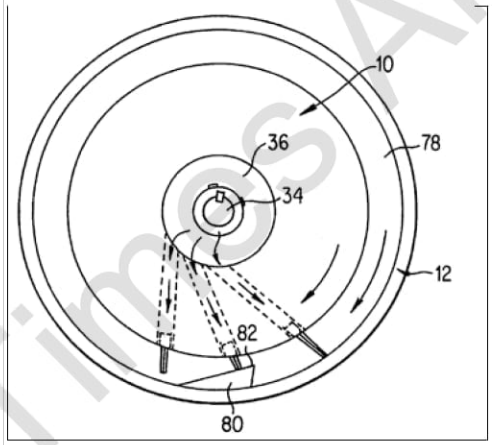

Figure 5

It is believed that the operation of the invention should be clear from the foregoing description. To summarize, in order to ensure high pumping capacity by the rotor a large number of liquid passages 40, 42 are provided in the rotor, and though the outlets of these passages can be accommodated on the outer periphery of the rotor, the inlets are too numerous to be accommodated in a single inlet cavity. Thus two inlet cavities 36, 38 are provided with the inlets of alternate passages 40, 42 opening into the respective inlet cavities 36, 38. The total flow projected through the passage outlets 40a, 42a onto the rotor outlet 62 leading to the heat utilization device exceeds the capacity of that outlet, with some of excess pumped liquid flowing through the bypass passages 76, 78 back into the rotor housing 12 where this continuous in-flow liquid substantially decreases or eliminates cavitation while the pre-heated by-pass liquid contributes to the heat in the liquid otherwise heated by its contact with the exterior of the entire rotor, by being impelled through the restricted orifices 46 in the rotor passages and by the effects of one or more wedge shaped liquid shear ramps 80. It will be understood that liquid issuing through those motor outlets when not in alignment with the housing outlets impinge on the wall of the housing and is reflected back into the inlet cavities, as indicated by the arrows 84 in FIG. 4 all of which contributes to the frictional heating of the liquid. The by-pass passages 76, 78 not only obviate cavitation but they serve to quickly reheat the nearly cold liquid returning to the rotor housing from the heat exchanger 66.

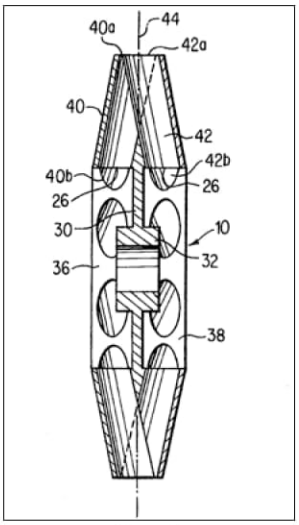

Figure 6

Having now described the invention, it will be apparent that it is susceptible of changes and modifications without, however, departing from

New Energy Times Archive

the scope and spirit of the appended claims.

What is claimed is:

1. Apparatus for heating liquid comprising: a rotor for disposition within a housing defining a reservoir for a heat transfer liquid, said rotor being rotatable about an axis of rotation in a predetermined direction and having axially spaced front and rear annular face members each having radially spaced inner and outer edges, radially spaced inner and outer cylindrical surfaces of predetermined axial width joining the respective inner and outer edges of said face members, a web having an axial width substantially less than the axial width of said inner cylindrical surface and being fixed to said surface midway of the width thereof, said web with said inner cylindrical surface on either side of said web defining first and second annular inlet cavities in said rotor, and a plurality of passages in said rotor having outlets circumferentially spaced around and opening through said outer cylindrical surface, alternate ones of said passages having inlets opening through said inner cylindrical surface on one side of said web to connect said alternate ones of said outlets with said flrst inlet cavity, the other alter nate ones of said passages having inlets opening tbrough said inner cylindrical surface on the other side of said web to connect said other alternate outlets with said second inlet cavity.

2. The apparatus of claim 1 wherein said passages all slope generally with respect to said axis of rotation of said rotor in a direction opposite to the predetermined direction of rotation of said rotor to impel liquid through said passages with high centrifugal force.

3. The apparatus of claim 2 wherein said outlets through said outer cylindrical surface lie summetrically within a plane bisecting said rotor.

4. The apparatus of claim 2 wherein said passages are substantially straight between said inlets and outlets, the alternate passages sloping in an axial direction towards said frst inlet cavity, the other alternate passages sloping in an opposite axial direction towards said second inlet cavity.

5. The apparatus of claim 1 wherein said passages are arranged relative to the axis of rotation of said rotor in said predetermined direction to impel liquid to flow by centrifugal force from said frst and second inlet cavities through said passages outwardly of said rotor, and restricted orifices in said fluid passages to cause liquid to become frictionally heated as it is impelled through said orifices.

6. The apparatus of claim 5 including said housing, and means for rotating said rotor within said housing in said predetermined direction, said housing having a pair of axially spaced end walls joined by a cylindrical side wall whose internal diameter is substantially complementary to the diameter of said rotor, a plurality of outlets through said side wall, at least one outlet leading to an inlet of a heat utilization device, a plurality of inlets through at least one end was of said housing, there being at least the same number of inlets as outlets, at least one inlet being connected to an outlet of said heat utilization device, and by pass passages connecting at least some of the other of said outlets with corresponding other of said inlets.

7. The apparatus of claim 6 wherein all of said outlets through the side wall of said housing lie in the same plane bisecting said rotor whereby the outlets in said rotor successively align with the outlets through the side walls of said housing as said rotor is rotated to project liquid from the outlets of said rotor directly into the outlets of said housing.

8. The apparatus of claim 7 wherein the outer diameter of said rotor is less than the inner diameter of said housing to provide an annular space between said housing and rotor, and at least one wedge shaped ramp fixed to said housing ramp in said space, said ramp having an edge terminating in close adjacency with the periphery of said rotor, said ramp further frictionally heating said liquid througb shearing action as said liquid is impelled through the passages in said rotor by rotation thereof.

9. The apparatus of claim 8 wherein said wedge shaped ramp diverges in a direction opposite to the rotation of said rotor in its predetermined direction.

10. The apparatus of claim 7 wherein the liquid pumped through the outlets in said rotor exceeds the capacity of said outlet to leading to said heat utilization device to accept said pumped Liquid, at least some of said excess liquid being accepted by said by-pass passages.

United States Patent

Perkins, Patent Number: 4,483,277
Date of Patent: Nov. 20,1984

SUPERHEATED LIQUID HEATING

SYSTEM Inventor: Eugene W. Perkins, Dawsonville, Ga. 30534 Appl. No.: 500,343 Filed: June 2, 1983 References Cited U.S. PATENT DOCUMENTS
4,226,364 10/1980 Utesch 237/13 X
4,277,020 7/1981 Grenier 122/26X
Primary Examiner—Henry Bennett Attorney, Agent, or Firm—Scrivener, Clark, Scrivener and Johnson

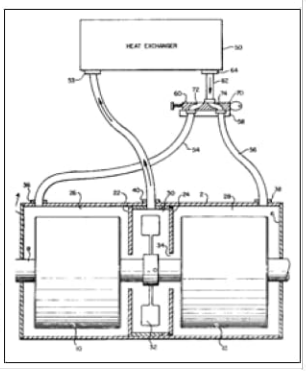

ABSTRACT

A heating system using two liquid heaters of the immersed rotor type is provided for supplying heated liquid to a heat exchanger, and the liquid heaters are alternately connected to and disconnected from the heat exchanger so that the disconnected heater will produce superheated liquid.

United States Patent

Perkins, Patent Number: 4,501,231
Date of Patent: Feb. 26, 1985

HEATING SYSTEM WITH LIQUID PRE HEATING

Inventor: Eugene W. Perkins, Dawsonville, Ga. 31742
Appl. No.: 500,346, Filed: Jun. 2,1983
Refs. Cited U.S. PATENT DOCUMENTS
4,143,639 3/1979 Frenette 126/247
4.277.020 7/1981 Grener 126/247
Primary Examiner—Henry Bennett
Attorney, Agent or Firm—Scrivener Clarke Scrivener & Johnson

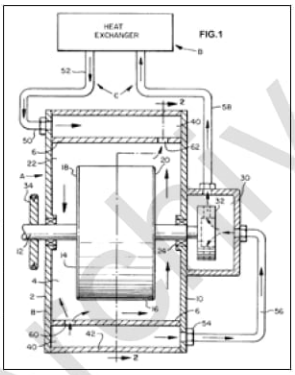

ABSTRACT

A heating system is provided in which a rotor is rotated within a body of liquid within a chamber to heat the liquid by friction, and the liquid is conveyed to a heat exchanger and then returned to the liquid heater. The rotor chamber of the liquid heater is surrounded by a jacket chamber to which cooled liquid passes from the heat exchanger and in which it is heated by convection from the rotor chamber and from which it passes to the rotor chamber.

Other Patents by Ralph E. Pope, Jr.

United States Patent

Pope, Jr. *et al.*, Patent Number: 5,541,803
Date of Patent: Jul. 30, 1996

ELECTRICAL SAFETY DEVICE

Inventors: Ralph E. Pope, Jr., 3680 Ryans Bluff Dr., Cumming, Ga. 30130; Kenneth S. Watkins, Jr., Rte. 7 Box 2760 River Dr., Dahlonega, Ga. 30533
Appl. No.: 206,966 Filed: Mar. 7,1994
References Cited U.S. PAT. DOC.
2,501,499 3/1950 Crowley 219/20;
3,027,496 3/1962 Donath 317/133.5
4,063,447 12/1977 Mathison 73/27 R;
4,577,094 3/1986 Mills 219/505
4,607,154 8/1986 Mills 2191509;
4,677,281 6/1987 Mills 219/501
4,707,686 11/1987 Greenhalgh 219/1505; 4,891,500 11/1990 Bloore 219/505; 4,894,513 1/1990 Koontz 219/494; 5,221,916 6/1993 McQueen 219/544; 5,360,962 11/1994 Pettit 219/497; 5,424,895 6/1995 Gaston 361/103
Primary Examiner - Jeffrey A. Gaffin, Assistant Examiner - Ronald W. Leja, Attorney, Agent, or Firm - Kenneth S. Watkins, Jr.

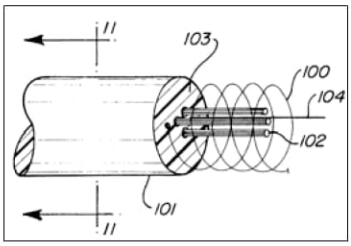

ABSTRACT

An electrical safety device is disclosed which utilizes a sensor conductor configured in a continuous loop and disposed in an electrical component so as to sense overtemperature or mechanical damage over a length or wide area of the component. The sensor may be simple insulated or non insulated copper wire. A low voltage potential is maintained across the sensor conductor. The sensor circuitry includes ambient temperature compensation.

United States Patent

Pope, Patent Number: 4,969,300
Date of Patent: Nov. 13,1990

ROTATABLE BUILDING

Inventor: Ralph E. Pope, 2525 Ivy St. East, Cumming, Ga. 30130
Appl. No.: 478,516 Filed: Feb. 12,1990 Primary Examiner—John E. Murtagh
Attorney, Agent or Firm—Scrivener and Clarke

ABSTRACT

The lower edge of a wall of a cylindrical rotatable building has a radially inwardly extending flange of inverted U shape which encompasses the upper peripheries of wheels rotatably mounted on horizontal axles carried on a fixed foundation for the building. The inverted U-shape of the flange not only supports the building for free rotation about a vertical axis but it at all times spaces the building wall from direct engagement with the wheels while restraining the building against substantially any lateral movement relative to the fixed foundation for the building.

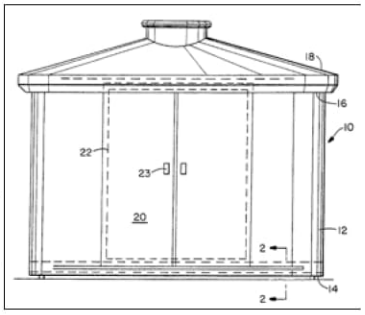

New Energy Times Archive

The 7th International Conference on Cold Fusion — Initial Impressions and an Overview

by Jed Rothwell

Over 200 scientists, engineers, inventors, students, and investors convened in Vancouver, Canada for the Seventh International Conference on Cold Fusion, ICCF-7 (April 19-24, 1998). ICCF-6 had been held in October 1996 in Hokkaido, Japan. ICCF-8 will be held in Italy in the fall of 1999, following the custom of rotating the conference from Asia to North America to Europe.

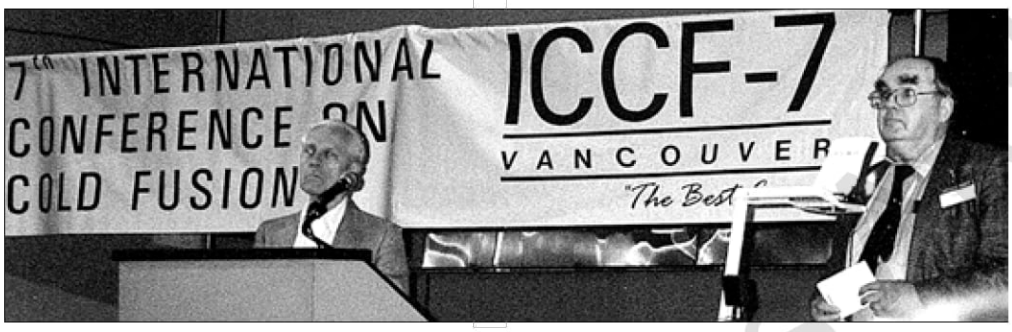

Dr. Les Case (R) presents his "catalytic fusion" ideas at ICCF-7, Session Chair, Prof. Richard Oriani (L) of the University of Minnesota, presented experimental data that might indicate a "polyneutron" basis for cold fusion. *(Photo: E. Mallove)*

Registrants at the conference this year came from Australia (4), the Bahamas (1), Canada (10), China (14), France (8), Germany (6), Greece (1), India (1), Italy (16), Japan (30), Netherlands (1), Poland (1), Romania (1), Russia (14), South Korea (1), Spain (1), Switzerland(2), Taiwan(1), United Kingdom (3), and the U.S. (96). Registrant totaled 211.

There were many good papers at ICCF-7 about research that has continued for years, especially from Michael McKubre, George Miley, Ed Storms and Martin Fleischmann. I'll discuss these later, but for now I would like to describe some notable surprises, that is, papers describing new and unexpected breakthroughs. These have not been replicated or independently verified yet— except for the pioneering work of Dr. Leslie C. Case, who successfully demonstrated his catalytic fusion process at our lab in Bow, New Hampshire less than a week after ICCF-7 (See the story about this work on pages 32-40). I would target them for a closer look and near-term replication. Case's and Ohmori's experiments appear to be relatively simple to replicate. Attached are six abstracts describing novel, unexpected developments. (Unexpected by me, anyway.) Papers are listed alphabetically by the main author: Cain, Case, Iwamura, Ohmori), Silver, and Stringham. Here are my comments about the papers.

B. L. Cain et al. (Mississippi State University)

Thermal Power Produced Using Thin-Film Palladium Cathodes in a Concentrated Lithium Salt Electrolyte

Sputtered thin film palladium is electrolyzed in highly concentrated electrolyte at high temperatures. (Cain selected a high temperature, because I had written that Fleischmann recommends it, which is gratifying. At least one researcher listens!) Six out of six cells produced heat, ranging generally from 50 to 100 watts, with one run at 200 watts, which is extremely high power density for a thin film experiment.

The authors used much more electrolyte than normal, in a transparent cell, so they could see what was going on better than most researchers can. They emphasize the importance of direct observation. A number of factors raise the suspicion this might be a chemical reaction:

1. Much lithium carbonate precipitated out of the electrolyte.
2. In one case, the cell began to produce heat before electrolysis was turned on
3. The excess heat runs were fairly short, and successful runs were accompanied by intense and somewhat weird chemical reactions also took place continuously, with cloudiness, bubbles and so on.
4. The complex chemical reactions are apparently critical to the excess heat. When other, equally vigorous but different chemical changes took place no heat was observed. For example, when lithium salts coated the vessel above the water line heat was not generated; when the upper portion of the vessel remained clean, heat was generated.

To allay worries about a chemical reaction masquerading as cold fusion, the chemistry department did a careful analysis of the precipitate and of before and after samples of electrolyte, cathode and other components. The precipitate was tested when it was still a wet slurry. The conclusion was that *only* ~5% of the lithium converted to carbonate. If 100% of the lithium had been consumed, this would have generated enough chemical heat to explain the excess. The carbonate was presumably formed from carbon from the air, because this is an open cell. It was more open than usual, and more than recommended, so I suggested they use a gas bubbler. This might prevent carbonate formation which might also clobber the reaction, which would be interesting. The power was cycled on and off in order to perform loading measurements. I suspect this may have contributed to the success of the experiment (assuming it did actually succeed and this is not chemistry.) I would urge people who replicate the experiment to cycle the power in the same pattern, even if they do not measure loading when the current is off.

The fact that the cell began producing heat before electrolysis is surprising and suspicious, as Douglas Morrison of CERN pointed out, but it is not totally unexpected. Fleischmann has been telling me for years that he expects chemical methods of making hydrides might be superior to electrochemistry. (Note well that Dr. Les Case's work appears to do just that—see below.) Morrison claimed these results contradict others because "cold fusion requires electrochemistry," but this is not true. Beginning in March 1989, gas loading, ion beam loading, and other methods have been reported and discussed at the ICCF conferences which Morrison attended.

This experiment will have be independently confirmed or widely replicated before I believe it, but it is interesting and tentatively it looks like quality work to me. Cain agreed to try to arrange independent verification soon. He will also attempt to

Www.EnergyFrontier.Active

run a cell for a long time, past the "limits of chemistry."

L. C. Case (Fusion, Power, Inc., Greenland, New Hampshire)
Catalytic Fusion of Deuterium

Gas loading with commercial hydrogenation catalysts consisting of ~1% palladium on activated carbon. The cell must be maintained at a temperature between 150 and 250 °C, no higher or lower. It is first loaded with ordinary hydrogen gas, which cleans the catalyst and purges oxygen. It is then evacuated and loaded with deuterium gas. The temperature rises 5 to 30 °C over the baseline temperature established with hydrogen, indicating 10 to 30 watts of excess heat. The excess heat lasts for weeks. He has never let it run indefinitely. He quenches the heat by letting the cell cool. The experiment has been repeated dozens of times successfully. Dennis Cravens of CETI commented that the treatment with hydrogen may be important. It serves as a null run and it cleans the catalyst. Someone asked Case whether the hydrogen blanks might be producing heat. He responded that he would have no way of telling; he only knows that deuterium is much warmer. (He ignores differences less than 5 °C.) I was suspicious that this might be an artifact of the different heat conduction coefficients of deuterium and hydrogen. Such problems were reported by Mizuno, Oriani and others working with gas calorimeters. I asked Case about the position of the thermocouples, gas pressure, calibration techniques and the cell wall temperature. I am satisfied this type of artifact is not a factor.

In his conference summation, McKubre cited this as one of the most significant papers, because Case appears to have developed a 100% reproducible process, and because he is willing to publish all details about experiment. Mallove and I agree that at the moment this may be the most important experiment in cold fusion. At present, Case uses an uninsulated steel cell , which he raises to the critical operating temperature with an electric heater. We advised him to move the cell to an insulated container, perhaps a Dewar, and to turn off the electric heater once the reaction begins. He is going to do that. If this is a genuine cold fusion excess heat reaction, the cell should self-heat and remain hot indefinitely with no input, probably for years. This test would do away with the need for calorimetry and resolve all doubts about the existence of the excess heat.

Case is a chemical engineer who has decades of experience working with these catalysts. Beginning in 1992, he scoured the catalogs and requested sample materials from several chemical companies. He tested dozens of samples at different temperatures and pressures, in an Edisonian search for one that would rapidly absorb deuterium and develop excess heat reliably. He finally found a particular type of catalyst that is available from three suppliers. He has filed for an international patent, which requires that all details be revealed even before the patent is granted (see PCT announcement beginning on page 30). At ICCF-7 Case agreed to bring his cell to our laboratory in Bow, New Hampshire for independent verification, and this was done successfully (see page33). The materials in this cell are simple and cheap. The chemical companies can supply tons of the catalyst, and only 50 to 100 grams of the catalyst is need for each small cell, so this would make an ideal demonstration cell. If we determine it works, we hope to license the device, manufacture and distribute hundreds of demonstration kits within months. We move fast here at *Infinite Energy!*

Case took samples to Prague where he rented the use of a nuclear research laboratory to search for neutrons during the heat events, but after extensive research, he determined there are none. Case took a cell that had run for weeks to Oak Ridge national Laboratory in Tennessee. They found 100 ppm helium in the used gas—far above the 6 ppm atmospheric level for helium.

Y. Iwamura, Mitsubishi Advanced Technical Research Center., MItsubishi Heavy Industries, Ltd.
Detection of Anomalous Elements, X-Ray and Excess Heat Induced by Continuous Diffusion of Deuterium Through Multi-Layer Cathode (Pd/ CaO/ Pd)

This is a continuation of work reported at the previous two ICCF conferences. They have made considerable progress. The experimental apparatus is a multi-million dollar instrument complex installed in a clean room. In six out of six experiments, they detected excess heat, x-rays and transmutations. This is a unique cathode, with layers of palladium and calcium oxide. Deuterium is loaded on one side electrolytically, and then sucked through the cathode into a vacuum chamber. This increases the mobility of the deuterium, which the authors believe enhances CF. Dennis Cravens and others have been saying that for years. The temperature is fairly high, 40 °C I think, but not high enough. Per Fleischmann's recommendation , Iwamura will try higher temperatures.

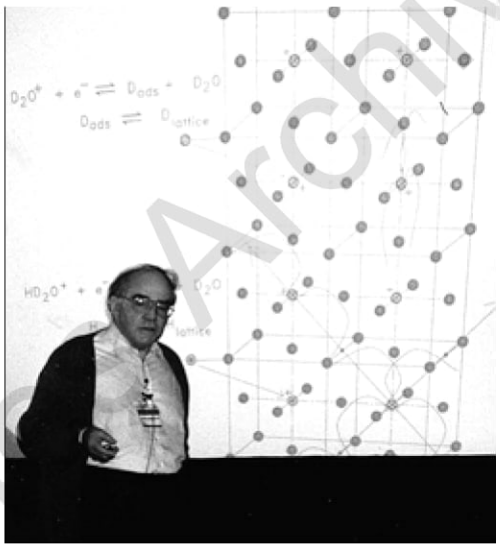

Dr. Martin Fleischmann provided an overview of Cold Fusion: Past, Present, and Future
(Photo: E. Mallove)

The transmutations are confirmed with three independent methods of spectroscopy: EDS, XPS and something called WDS. Transmutation is also confirmed quantitatively: 22 micrograms of titanium were found on the active side of cathode, compared to 23 micrograms of titanium contamination measured in the entire cell before the experiment. It is extremely unlikely that all of titanium selectively leached out of the anode and electrolyte, because other contaminants like copper were present in larger amounts before the experiment, but no significant amount of copper was found on the anode. (Furthermore, Cu is more mobile then Ti.) The Ti isotopes were not unusual, but the Fe found on the cathode was profoundly shifted from their natural isotope abundance ratio.

X-rays were observed on two detectors simultaneously, tuned to x-ray and gamma-ray spectra. An x-ray detector under the cathode, shielded from the active side, saw no activity, as expected. Tom Claytor of Los Alamos National Laboratory told me he thought the x-ray example might be a burst of noise , because it climbed and then halted abruptly, but other experts disagreed. They pointed out that earlier bursts tapered off gradually. (These others were shown on a much smaller scale in the viewgraph, but Iwamura confirmed the shapes.) They also pointed out that the sample burst lasted 1,000 seconds (17 minutes) which is longer than most bursts of noise, and the drop-off

New Energy Times Archive

Dr. Francesco Celani (INFN-LNF, Frascati, Italy), Larry Forsley, JWK International Corp. (Virginia, USA); and Don Holloman (The Cincinnati Group) hold part of Cincinnati Group Cell. Its ability to transmute thorium to stable elements was confirmed in Italy, as explained by Dr. Celani at ICCF-7. *(Photo: E. Mallove)*

looked more abrupt that it might have been because this was a count of x-ray emissions "binned" into 20 second points. If this was noise, it originated in the cell, not in the electrical system or the individual detectors, because all events were seen on two exposed detectors but not in the shielded one. Iwamura says he took other steps to ensure the x-rays are real and he has a great deal more information about them, like the spectra. I hope he publishes it in detail.

Input power was ~40 watts, output ~42 watts. The 2 watt excess was measured at three-sigma, which is low compared to most calorimeters. The cell is made of thin-walled Teflon. This allows x-ray detection, but it reduces calorimetric precision.

Mitsubishi has demonstrated how big money and high technology can make a superb contribution to this field. This kind of experiment showing multifaceted, indisputable evidence of a nuclear effect is exactly what the skeptical physics purists have been demanding for nine years. Unfortunately, judging from Morrison's reaction, I expect the skeptics will ignore it. I noted that Morrison ignored Iwamura's lecture after taking a few notes, turning his attention instead to counting heads on the List of Attendees. He was apparently tallying them up on a sheet of paper, perhaps in support of his "Regionalization of Results Theory."

T. Ohmori and T. Mizuno, Catalysis Research Center, Hokkaido University

Strong Excess Energy Evolution, New Element Production, and Electromagnetic Wave and/ or Neutron Emission in the Light Water Electrolysis with a Tungsten Cathode

Abstract: Strong heat evolution enough to incandesce the electrode was observed by applying a high electric power. The excess energy amounts to 183 W which is 2.6 times the input power. At the same time strong electromagnetic wave and/or neutron emission reaching 60,000 counts/sec by a neutron counter was observed. During the electrolysis, considerable amounts of new elements, *ie*. Pb, Fe, Ni, Cr and C were produced. The distributions of Fe, Cr and C on/in the electrode were overlapped. The isotopic distribution of Pb deviated greatly from the natural isotopic abundance. These results show that the nuclear transmutation reaction took place on/in the tungsten electrode during the electrolysis.

Briefly, this paper describes excess heat and transmutations from tungsten run at high voltage at 85 to 100 °C. I like this experiment because it is quick. The control run goes from 85 to boiling in two minutes, and the main experiment, with the same power input, the same mass of water, and the same stirring boils in 45 seconds. The experiment is quick, but the analysis takes weeks.

D. S. Silver and John Dash, Physics Department, Portland State University

Surface Studies of Palladium After Interaction with Hydrogen Isotopes

Palladium cathodes were electrolyzed once for very short periods, up to 6 minutes, and then put aside and observed. Observations were made months and years later. Gradual, profound changes to the metal were seen. This is an extraordinary result. If replicated, it would challenge many long standing hypotheses, like the idea that high loading is necessary. I thought the work was carefully done and well presented.

R. Stringham, First Gate Energies

Cavitation in D_2O with Metal Targets Produces Predictable Excess Heat

Cold fusion induced with cavitation bubbles. Like the Iwamura experiment, this was reported at previous conferences, but new developments were described. Input to output ratios are large. Day-long heat after death events and transmutations were observed. The experiment was described in greater detail than it has been previously.

Complete Abstracts for Above Summaries

ELECTRICAL RESISTANCE AND MORPHOLOGY OF PALLADIUM THIN-FILM DURING HYDROGEN LOADING

Bruce L. Cain and Trace C. Scrivner, Mississippi State University, Mechanical Engineering Department, Mississippi State, MS; Anne B. Cheney and J. Michael Rigsbee, University of Alabama at Birmingham, Materials and Mechanical Engineering Department, Birmingham, AL

Sputter deposited palladium thin-film on alumina substrates were loaded with hydrogen and deuterium using electrolysis to observe the influence of loading on film morphology and electrical resistance. The palladium coatings were prepared by DC magnetron sputtering of a palladium target (99.95%) in an argon working gas at 5 mTorr, with substrate cooling to keep deposition temperatures below 70 deg C. Films were deposited onto 2.5 cm x 5 cm x 0.127 cm (thick) conductor grade aluminum oxide (99.67%) during 45 minute runs which produced film thicknesses of about 5 microns. Both the alumina substrates and the Pd target were sputter cleaned at several hundred watts using an argon discharge before opening shutters to begin the deposition. Several samples were then annealed at 700, 800 and 1000 °C for one hour to allow for recrystallization and grain evolution.

The as-deposited films exhibited typical microcrystalline structure with randomly oriented and elongated grains of maximum size nominally 1-2 microns. The films had good uniformity with porosity less than 1%. Using digital image analysis on the series of annealed samples before hydrogen loading, the grain-size distributions were measured using an intensity-analysis algorithm to identify grain boundaries in the three planar directions. These results showed essentially log-normal distributions with some evidence of abnormal growth during annealing. Average grain sizes were .5, .7, 1.1, and 2.5 microns for the as-deposited, 700, 800 and 1000 °C anneals, respectively.

Samples were cathodically charged in a lithium-salt electrolyte using a 2.5 molal solution of $LiOH\text{-}H_2O$ in D_2O. During loading of the films the electrical resistance of each sample was

New Energy Times Archive

monitored using a 4-wire resistance probe made from Teflon insulated platinum wires friction pressed to the palladium film surface. To make these measurements the electrolyzing current was periodically cycled off to avoid electrical interference, resulting in a duty-cycle of about 60%. Unique "loading resistance curves" were obtained during constant-current loading at 1 mA/cm^2 which exhibit what are believed to be a/b hydride phase plateaus. After resistance increase of about 80%, the films were re-examined for morphological changes. All films delaminated from their alumina substrates during loading, and showed extensive swelling and embrittlement. However the as-deposited films retained much of their film integrity while the larger-grained annealed samples showed extensive cracking along grain boundaries.

These results along with more complex issues related to "surface blackening" during thermal power production and/or current reversal, will be discussed. Work is continuing to identify the "blackening deposits" using Auger and XRD analysis of the film surfaces.

CATALYTIC FUSION OF DEUTERIUM

Leslie C. Case, Sc.D.

After much experimentation, I have found specific conditions under which D_2 gas catalytically fuses to helium-4. Some of the prior cold-fusion work may have adventitiously depended on such a catalytic effect.

In my process, D_2 gas is contacted at super-atmospheric pressure and a temperature of about 130 to 2750° C, with a supported metal catalyst. I have looked at many such catalysts, and found that a platinum-group metal supported on activated carbon, at a loading of about ~ to 1% on the substrate, seems to be preferred. Pd, Pt, Ir, and Rh all work, and Pd seems preferred. Other supported catalysts may ultimately be found to also work.

The process does not produce neutrons, or tritium, but two analyses of long-term tests have found about 100 ppm. of helium-4 in the fuel gas.

Suitable equipment for this process is displayed. About 50 to 100 g. of candidate catalyst is loaded into the vessel, and the apparatus is sequentially tested with H_2 and D_2 gas at the same power input into the heating mantle. If the catalyst is active for D_2 fusion, the temperature reached With D_2 is more than 5 °C. higher than with H_2.

This process shows promise for cheap, large-scale energy production for the future.

DETECTION OF ANOMALOUS ELEMENTS, X-RAY AND EXCESS HEAT INDUCED BY CONTINUOUS DIFFUSION OF DEUTERIUM THROUGH MULTI-LAYER CATHODE (Pd/ CaO/ Pd)

Yasuhiro IWAMURA, Takahiko ITOH, Nobuaki GOTOH, Mitsuru SAKANO and Ichiro TOYODA, Advanced Technology Research Center, Mitsubishi Heavy Industries, Ltd. 1-8-1, Sachiura, Kanazawa-ku, Yokohama, 236, Japan,

We investigate "cold fusion" phenomena with a new type of experimental apparatus for the purpose of causing nuclear reactions by continuous diffusion of deuterium through Pd. It consists of an electrochemical cell and a vacuum chamber as shown in Fig. 1 (not reproduced here). There exits continuous flow of deuterium atoms from the electrolyte side to the vacuum side through a Pd plate.

Continuous X-ray ranging from 10keV to 100keV, neutron and excess heat productions were observed using the apparatus. Several elements such as Ti, Si, Cu or Fe were detected on the surface where deuterium atoms passed through Pd cathodes by EPMA. XPS, AES and ICP-MS were applied for the analysis of Ti. Quantitative discussion taking account of the analysis of D_2O solutions, Pd cathodes and platinum anodes shows that the detected Ti atoms cannot be explained by contamination.

A multi-layer cathode was developed based on EINR (Electron Induced Nuclear Reaction) model which the authors introduced for explaining experimental results. We observed excess heat generations and X-ray emissions for all the cases we tried (6 cases) by using the multi-layer cathodes. It was demonstrated by the experimental results that CaO was one of the elements which can induce nuclear reactions and it was necessary that CaO exists at the near surface of Pd. Different elements such as Zn or Pb, in addition to Ti, Si, Cu or Fe were also detected on the surfaces of the multi-layer cathodes. We are now trying to clarify the origins of these elements. At present, we consider that the detected Fe atoms may not be explained only by contamination, as SIMS analysis of Fe showed isotope shift.

SURFACE STUDIES OF PALLADIUM AFTER INTERACTION WITH HYDROGEN ISOTOPES

D. S. Silver and J. Dash, Physics Dept., Portland State University, Box 751, Portland, OR 97207, U.S.A.

Several pairs of cold rolled palladium cathodes (40 mm thick) were electrolyzed in series for various times up to six minutes. One of each pair was in light water electrolyte and the other in heavy water electrolyte. After electrolysis these cathodes were characterized by atomic force microscopy (AFM) and secondary ion mass spectrometry (SIMS).

The AFM studies of the heavy water electrolyzed cathodes revealed asperities, craters, and nodules, suggesting that localized melting and recrystallization had occurred, as we reported previously on specimens electrolyzed for longer times. AFM studies 1.5 years later revealed loose, nanometer-sized particles, indicating that these cathodes continued to change during storage, long after electrolysis was performed, which we also reported previously on other cathodes. The morphology of palladium cathodes electrolyzed in light water electrolyte remained nearly identical to that of the unelectrolyzed control, even after 1.5 years.

Roger Stringham at ICCF-7
(Photo: E. Mallove)

SIMS profiles of six palladium isotopes for a cathode electrolyzed for six minutes in heavy water showed inversions of isotopic abundance compared with the control. These results are similar to those which we reported previously on another palladium cathode electrolyzed for a longer time.

CAVITATION IN D_20 WITH METAL TARGETS PRODUCES PREDICTABLE EXCESS HEAT

R. Stringham, First Gate Energies, 2166 Old Middlefield, Mountain View CA, 94043, USA

New Energy Times Archive

Acoustically generated transient cavitation bubbles, TCBs, are created in D_20 and characteristically collapse violently on surfaces of target metal lattices in the M3C device. During the one microsecond collapse process of a pseudo-adiabatic nature, the bubble contents are dissociated and ionized with a portion of the contents accelerated via the formation of a bubble jet which is directed through the target surface into a lattice. The bubble jet produces local super loading of deuterons within the metal lattice a few microseconds in duration before diffusion quickly dissipates these deuterons throughout the lattice. These TCBs are natural dense plasma micro accelerators in the range of 100 eV. The frequency of the pulsed acoustic source was 37 KHz. The interaction between the injected bubble contents and the metal lattice relates to an unknown mechanism which generates heat in excess of that introduced by acoustic heating. The excess heat, Q(x), is separated from the other heat inputs using steady state differential calorimetry calibrated against an internal Joule heater. Both the calibration and cavitation experiments are run at steady state temperatures for about 24 hours as the Q(x) cannot be determined until steady state conditions are reached (about 2 hours).

The experimental objective was to gather the results of 150 runs and deduce relationships that are not obvious with just a few experimental results. Parameters such as pressure, temperature and metal targets can be changed for each run. These runs, each of 24 hour duration, were divided into 50 joule heater calibration runs, 15 sonication runs of empty or inactive foils and 80 sonication runs of active foils. The metal foil targets were titanium, silver, copper, nickel titanium alloy, stainless steel or empty reactor. Plots of the reduced data show that Q(x) varies with the ratio of the vapor pressure of D_20 over the external pressure of Ar. The excess heat, Q(x), was often greater than 3 times the heating from the piezo input.

The watts delivered to the piezo device are divided into piezo heating and acoustic heating. The acoustic heating is further divided into frictional heating of the D_20 and heating due to cavitation. If the acoustic level is too low, no cavitation occurred and no Q(x) is produced. The important watt input is the piezo input, (A+B), which is used in the calorimetric calculations. It is important to relate the parameters of cavitation input, vapor pressure and external pressure to produce an environment for the excess heat production in the M3C reactor. If these parameters are controlled the Q(x) is predictable from those cavitated targets. It appears that the cavitation Q(x) production in metal targets other than Pd occurs and even occurs in targets that do not form hydrides. This perhaps can be explained by the interactions of local transient concentrations of D injected into a non-hydriding lattice such as Ag. The target metal Cu is of special note as it produces the highest ratio of Q(x) to (A+B) of 6 to 1.

The above-described six novel papers from ICCF7 are about unexpected breakthroughs or unconventional methods. Now I would like to discuss some of the outstanding conventional or "mainstream" papers at the conference, which greatly outnumbered the novel presentations. "Mainstream" may seem like a odd word in the context of cold fusion, which is itself so marginalized, but it is the correct word. Cold fusion is split into factions centered around materials, methods and theories. Factions include: heavy water palladium bulk; high surface palladium (palladium black, thin film, thin wire, sputtered palladium); nickel light water; cavitation; ion beam. . . and so on. Too often, people in these factions ignore one another.

The conventional wing has been reluctant to accept strong evidence for excess heat with nickel/light water and transmutations—and even more reluctant to let go of some marginal evidence for neutrons and helium. The conference summaries presented on the last day by Bressani and McKubre were interesting in that regard. I find Bressani an "extreme" conventionalist. This year he again said that helium and neutrons are the most important evidence for cold fusion. This year, for the first time, he granted that there is good evidence for transmutation as well. Perhaps he was thinking of the work at U. Illinois and Mitsubishi. He mentioned transmutation briefly, but he devoted most of his attention to neutrons and helium. I suppose he thinks the transmutations alone cannot account for the excess heat, or that transmutations cannot occur without a neutron flux. Until this year I have classified McKubre as a rock solid conventionalist, but he has broadened his perspective even more than Bressani has. He noted the transmutation evidence and he said that Mitchell Swartz presented the first convincing data showing excess heat in nickel light water systems.

Much of the outstanding mainstream research has continued for years, making slow progress. Much of it is highly technical, and over my head. All of the theory papers are over my head so I cannot comment on them. I should report that MIT Professor Peter Hagelstein thinks he has made progress recently, and he has greatly simplified the core mathematical expression in his theory, which is usually a good sign. I asked Storms if he feels there has been progress on the theory side, and what he thinks of the latest Hagelstein theory. He said the theories still do not make useful predictions for the experimenter. They are so generalized, they do not tell us why ordinary materials are not constantly and spontaneously undergoing massive cold fusion reactions.

Here are some brief comments and quotes from the abstracts of mainstream papers that caught my attention. These are listed alphabetically by the main author.

Ben Bush and J. J. Lagowski, U. Texas

"Methods of Generating Excess Heat with the Pons and Fleischmann Effect: Rigorous and Cost Effective Calorimetry, Nuclear Products Analysis of the Cathode and Helium Analysis"

Bush and Lagowski detected helium and excess heat at the milliwatt level with palladium supplied to them by the Japanese NHE (New Hydrogen Energy) program. The NHE itself says that it saw no excess heat, but Bush uses a better calorimeter, which he recommends. It is the Seebeck or Calvet envelope calorimeter. It is fully electronic, requiring no heat transfer fluid (cooling water), with no moving parts. It captures all of the heat. In the abstract, Bush writes: There is little standardization of methods employed by different laboratories and the performance characteristics of the various methods are obscure. We have settled upon high performance Calvet calorimetry as a cost effective, but highly reliable method for measuring excess heat." He makes an important point:

As the electrolysis proceeds a non-conductive film of oxyhydroxides builds up on the cathode surface. This film acts as a temperature sensitive activity step-up transformer. In the Pons and Fleischmann type isoperibolic calorimeter, excess heat causes the cell temperature to rise which decreases the degree of hydration (hence decreases deuteron mobility) so fewer deuterons carry the current and their activity increases which increases the excess heat...in a cycle that goes to thermal runaway and boil down.

Bush described his helium detection techniques during an evening workshop on calorimetry, which included participation by Scott Little of EarthTech International, who exhibited his

New Energy Times Archive

computerized flow calorimeter.

T. N. Claytor, Los Alamos National Laboratory
"In-Situ Measurement of Tritium Concentration Variation During Plasma Excitation of Deuterium Loaded Palladium and Palladium Alloys"

A continuation of the superb work that has been described here and at the web site www.nde.esa.lanl.gov/cf/tritweb.htm. Twenty-two new experiments were described. More evidence of tritium was presented at high sigma (σ>10). A promising alloy has been identified. My impression is that reproducibility has been improved, but Claytor may correct me on that.

Claytor explained again that great care must been taken to ensure that the spark reaches only the palladium target, not the holder or other components, which would sputter and contaminate the experiment. Sputtering of the palladium itself should be held to a minimum. As before, multiple tests are made to verify the radioactive product is actually tritium: "In addition to the real time tritium measurement, the deuterium gas can be combined with oxygen, at the end of a run, resulting in water samples that were counted in a scintillation counter." The energy spectrum and half-life confirm this is tritium. Progress has been made in sweeping out old tritium and other contaminants from the device between runs, so that the starting baseline level of tritium is lower than ever. Small details make or break an experiment: the spark must reach the palladium alone; the connections inside the loop have to be made of ultra-smooth material that can be swept clean of residual tritium.

Claytor said that new results will be uploaded to the web site soon.

M. Fleischmann , United Kingdom
"Cold Fusion: Past, Present and Future"

Fleischmann put up an excellent poster session and the next day he gave the best lecture I have ever heard from him. At his poster session he showed that some of Japan's NHE program cells probably produced excess heat, even though the NHE says they did not. This can be seen in the temperature relaxation after a heat pulse. When there is no excess heat, after a pulse the temperature returns to its previous level in a predictable curve. With excess heat this recovery is unpredictable. It may take much longer and the temperature may never return to the starting point. The NHE data was very noisy compared to other isoperibolic calorimeters of this class, and especially compared to Fleischmann's own equipment at IMRA Europe, but nevertheless Fleischmann was able to graph the IMRA data and show the heat pulse relaxation data. He did this analysis years ago and showed it to NHE scientists and managers. They did not respond then or at ICCF-7. They refused to give him any additional data and he says they stopped using calibration heat pulses during their replication of the Pons-Fleischmann isoperibolic cell experiments. Strictly speaking, these were not replications, because the heat pulse is an essential part of the protocol. It triggers the reaction and makes the calorimetry much more precise.

During his lecture Fleischmann demonstrated how precise his calorimetry is. He drew a curve of calibration point and showed that with sophisticated physics he can measure heat below the milliwatt level. This is a remarkable accomplishment, especially for an open cell isoperibolic calorimeter. Many people have pointed out potential weaknesses in these cells, especially at low power, when heat losses from the top of the cell dominate, thermal gradients become significant, and a layer of stagnant electrolyte can build up at the cell wall. Fleischmann is aware of these problems. He does not use excessively low power. (He can reliably measure tiny changes in power output when the power is reasonably high, but that is not the same as measuring very low power.)

Fleischmann said that before 1989 he and Pons thought about five different methods of producing the cold fusion effect:

1. Systems based on the electrodifusion of D+ in host lattices (especially Pd wires); 2. Systems based on the electrochemical charging of host lattices (especially of Pd electrodes); 3. Chemical Systems based on superacid/highly oxidizing conditions: the link to "Hot Fusion"; 4. Chemical Systems based on superbasic/highly reducing conditions; 5. Hybrids of these systems.

Item 3 may be what B. L. Cain has achieved. Interestingly, Fleischmann does not list gas-loading, a method many researchers tried in 1989 and thereafter, with some notable successes. The most recent reported success is by Les Case. If this can be confirmed widely it will probably lead to commercial energy generation, and it might relegate other forms of cold fusion to use in scientific research only.

Fleischmann again stressed the importance of relatively high cell temperature (above 60 to 80 °C) and dynamic, changing conditions. He said that even at low loading levels, well below the accepted 85% threshold, the cold fusion effect will be seen if the cell is heated up. Fleischmann stressed the importance of high temperatures at every conference since ICCF-3. He often states things obliquely, in lectures which are difficult to understand, but he has made this point without a hint of obfuscation, so I cannot understand why few scientists have heeded his suggestion.

Fleischmann thinks "tritium and neutron generation can be detected especially under non-equilibrium conditions." He thinks that electrodifusion in fine wires is an "especially promising" approach.

Several people remarked that is the first time they understood everything Fleischmann said. He tends to speak in riddles, and for several years he has been restrained from revealing technical details by his contractual obligations to IMRA. Last year he told me that since he has retired he now feels he can reveal some secrets. Fleischmann was the sole author of this lecture, he is no longer collaborating with Pons. Pons himself did not come to the conference, and the IRMA Europe laboratory he worked at has been closed down (or so we were told). I do not know what research he is doing at this time.

G. Lonchampt, Commissariat a L'Energie Atomique, France
"Excess Heat in Palladium Cathodes at Boiling" and "Excess Heat and Nuclear Ashes in Nickel Palladium Beads"

Jean-Paul Biberian (lecturing for Lonchampt) described two experiments now underway at the French Commissariat a L'Energie Atomique (Atomic Energy Commission—A.E.C.). The first is a continuation of the Pons-Fleischmann boil-off replication. None of the four platinum null experiments produced excess. Thirteen out of 14 experiments with palladium produced excess heat, which ranged from 5 to 29% during the final boil-off phase. These percentages are not as large as the A.E.C. reported at the last conference, or as good as Pons and Fleischmann reported, because the A.E.C. now begins measuring the final boil-off phase earlier, using a more rigorous method. They measure the waterline with a sensor. They designate the boil-off phase as the moment the water temperature reaches boiling and the water level drops according to the sensor. Formerly the onset was based on a time lapse video or visual observations of the cell. Biberian said that if you consider the boil-off performance based on the old onset, the excess is as high or higher

New Energy Times Archive

than it ever was. In earlier phases of the experiment the sensor provides additional evidence that no recombination occurs.

With little fanfare, but with perhaps great import, the French A.E.C. has set up a small, formal program on cold fusion—and, it is clearly getting interesting results.

The second A.E.C. experiment is a replication of the CETI light water/nickel bead cathode work. Beads supplied by CETI did not produce excess, but beads fabricated by the A.E.C. produced 200 to 400 mW, with input ranging from 0.5 to 4.0 watts. This input to output ratio is not as good as that reported by CETI years ago, or by Miley.

K. Matsui, R&D Center for New Hydrogen Energy (NHE)
"Excess Heat Measurements and Nuclear Detection Experiments in the NHE Program"

Matsui described 500 rigorous experiments conducted with ultra-high-tech equipment in which (they said) no significant excess heat and no tritium, neutrons or any other sign of a nuclear reaction was detected. The NHE project was canceled because of these disappointing results. The NHE began with a complex, ambitious plan describing a long list of goals and milestones. As far as I know, not a single one of these goals was reached; the program was a total failure. Some ICCF-7 participants praised their diligence and their meticulous studies of palladium loading and other materials research. Others said they developed the wrong kind of materials. Robert Huggins told me that he thinks the best bulk palladium cathodes have small grain sizes because the reaction occurs at grain boundaries and other dislocations. Mizuno and others have said this. The NHE materials program strove to increase grain size and to make the material homogeneous, without dislocations. Huggins described it as custom-designed to prevent cold fusion. As I pointed out in 1996 in *Infinite Energy* (Issue #10), the experimental methods chosen by the NHE were seriously deficient, based on papers by leading cold fusion scientists. The wrong type of palladium materials were selected, temperature was much too low, there were no dynamic changes to the cell environment, and the wrong type of cell wall material was selected. It takes only a single mistake to ruin an experiment.

The NHE found an artifact in an earlier experiment that they say calls into questions positive results. They put the I/J-fuel cell-type isoperibolic cell developed by Kunimatsu into a flow calorimeter. That is, they put a static calorimeter into a flow calorimeter, and tested them both simultaneously. The isoperibolic calorimeter showed excess heat, but the flow calorimeter did not. The reason is unclear, but it seems likely that the isoperibolic cell was fooled by low power thermal gradients or some other problem common to this type of cell.

One of Matsui's viewgraphs said that none of the experiments at the NHE produced excess heat, but a statement in parenthesis said "except for experiments performed by Melvin Miles." Matsui did not discuss these experiments. The NHE invited Miles for the last six months the lab remained open. He replicated the Italian thin wire electromigration experiments and apparently—according to this one statement in parentheses—he saw significant excess heat. Miles confirmed this briefly, but he says he is not allowed to discuss the results yet because his reports have not been translated into Japanese and approved by the NHE management. He hopes that he will be free to report his results at the next ICCF conference, in 1999. Miles said that originally Matsui, Asami and the other NHE managers planned to say nothing at all about his results, not even a statement in parentheses, but he prevailed upon them to add this sentence.

M. McKubre, SRI International
"Materials Issues of Loading Deuterium into Palladium, And The Association With Excess Heat Production"

McKubre analyzed his previous results with bulk palladium. As he put it, "On first inspection, the results obtained appear to be highly irreproducible, signaling the presence of uncontrolled variables . . ." The graph of all results shows a meaningless tangle of lines. However, when he categorized the experiments according to resistance measurements, removing the resistance affected by varying loading levels, he found the data falls into clear patterns. Three kinds of cathodes emerge from the apparent chaos, corresponding to three modes of resistance response to current:

Mode A, shows a linear decrease of resistance with a logarithmic increase in current. This is seen with cathodes that produce excess heat.

Mode C, a shallow decrease in resistance and a corresponding increase in current. These cathodes do not produce excess heat. The lattice shatters early on; they do not load.

Mode B, combines features of mode A and C. These cathodes begin to load and then fail catastrophically.

G. Name, G.H. Miley, University of Illinois
"Quantification of Isotopes Using Combined Secondary Ion Mass Spectrometry and Neutron Activation Analysis"

Miley talked about the continuing experiments with transmutation in CETI cells. He described the blank control runs. As before, he used two main methods of measuring isotope shifts, NAA and SIMS. NAA is relatively insensitive, but it samples the entire bead mass. SIMS is sensitive but it sees only a thousandth of a bead at a time, so statistical methods must be used extrapolate the results for the entire bead, and if the SIMS happens to look at one highly unusual spot on the bead this would distort the statistics. Miley described another problem, and concluded:

A separate problem involves isotope fractionation which can distort the isotope shifts (SIMS vs. Natural) up to 4% for the light elements and to 1% for the heavier elements. However, for example in Ti film run, about 51 isotopes have statistically significant deviations from natural and are not within the uncertainty due to isotope fractionation effects. Also the measured increase in concentration of isotopes/elements after the run cannot be explained in terms of known impurity sources or chemical effects, even considering statistical uncertainties.

E. K. Storms, Santa Fe, New Mexico
"Relationship Between Open-circuit-voltage and Heat Production in a Pons-Fleischmann Cell"

Storms described continued elegant experiments to detect changes in the open circuit voltage (OCV), which occur when the palladium is ready to produce the cold fusion reaction. Storms makes the case that the OCV is a more reliable indicator than loading measured by resistance or other methods. Loading is never uniform, and average high loading may not mean anything. Perhaps cold fusion only occurs in areas that are hyperloaded (much higher than average). He explains that "loading" as other people measure it describes the average composition, and: "average composition is not the best predictor for excess energy production. The OCV is proportional to the deuterium activity in the surface region. This value must be above 1.06 V (referenced to clean Pt) before excess energy will be seen regardless of the average composition." Storms described many simple, cheap but highly effective experimental techniques. He can measure loading precisely by mechanical means, based on the oil displaced and weighed on a microgram scale. He accom-

New Energy Times Archive

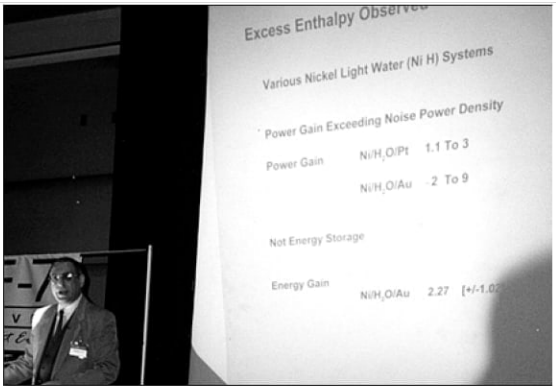

Dr. Mitchell R. Swartz of Jet Energy Technology, Inc. (Wellesley Hills, MA) and Editor of the newsletter, *The Cold Fusion Times*, discussed what some consider one of the most carefully documented proofs of excess power in nickel-light water systems. He has discovered optimal operating points for such systems. Another graduate of MIT doing very good cold fusion work. *(Photo: E. Mallove)*

plishes more with a modest budget and one worker (himself) than the NHE accomplished with $20 million and a few dozen people. But, Storms tells me that he often feels he has reached the limits, progress is too slow, and the problem is too big. He has worked wonders digging into the problem with a shovel, but the job calls for a bulldozer.

M. Swartz, JET Energy Technology, Inc.
"Comparative Pi-notch [Optimal Operating Point] Characteristics of Solid State Nuclear Systems"

Swartz described several years of work with nickel cathodes in light water, in a specially designed ultra-low noise calorimeter. He thinks there is an optimum operating point (power density) at which these cathodes produce heat, and that above or below it the excess heat fades away. As mentioned above, McKubre cited this as the first rigorous proof that the nickel produces excess heat. Actually, this proof has been around for some time. Swartz said these results are from three years ago, He presented this report (or a similar earlier version) at Texas A&M two years ago.

Swartz has spent tremendous effort designing, perfecting and calibrating the calorimeters, which have a complex design I have not seen elsewhere. They are boxes within boxes, and the heat is measured repeatedly as it passes from one box to the next outer box. This could be a superb research tool, but if your purpose is to convince people of the reality of a phenomenon, I feel it is a mistake to use a new calorimeter design. People will say your results are artifacts from a new, untested design. They will have no experience working with similar instruments, and no basis to judge whether your instrument is working or not.

Cold fusion is mysterious enough; you should not investigate it with mysterious and exotic instruments, unless you have no choice—or if the level of precision yields new physical insights. Whenever possible you should select a conventional instrument. If you must work with cathodes in the low power domain (below a half watt), I agree with the recommendation made by Bush, that a fully electronic Seebeck envelope calorimeter is best. It is high tech yet simple. It has no moving fluid or pumps, and it captures all of the heat from a cell, rather than sampling a small portion at one point in fluid or on the cell wall.

E. Yamaguchi, NTT
"Progress Report on the Study of Excess Heat and Nuclear Products by the 'In-vacuo' Method run at IMRA Europe"

Yamaguchi described a heart-breaking five year battle to replicate his earlier results. At NTT he fabricated special thin palladium gold plated cathodes. The cathodes were placed in a vacuum chamber. When current was passed through them they bent and produced a burst of heat and helium. Yamaguchi went on leave from NTT and built a much larger, more sophisticated instrument at IMRA, Europe. It allows fully mechanized, hands-off fabrication of the cathodes, which can be moved from chamber to chamber without ever leaving the instrument. Shielding against outside helium is improved. The instrument is better than the original NTT version in every way except one: I believe the sensitivity of the helium detection is not as good. Unfortunately, Yamaguchi was never able to replicate his original results. The heat bursts are now fully reproducible, but he feels they are mundane, being caused by mechanical forces released when bent, distorted lattice released. This result calls into question his NTT findings. Perhaps the helium and neutron results there were an artifact.

A Report on the Seventh International Conference on Cold Fusion —a Layman's Perspective

by Stephen Kaplan, Portland, Oregon

To learn more about the new energy revolution first-hand, I attended the Seventh International Conference on Cold Fusion, which was held in Vancouver, British Columbia, April 19-24, 1998. More than 200 cold fusion scientists from all over the world, shared the exciting findings of "anomalous excess heat" and "anomalous nuclear transformations", proving once again that, despite obituaries issued by mainstream scientists and science journalists, this is a very active and exciting research field. Most of the scientists came from the U.S. but large delegations also came from Japan, Italy, Russia, and China.

First, I have to confess to being more than a little confused at times during the conference. I'm not a physicist, chemist or engineer, although I probably am a bit above average in my science literacy quotient. If one learns by osmosis, then I certainly became more conversant with the field, its gains, difficulties and prospects, simply by being in the presence of so many distinguished scientists. After awhile, I was even able to grasp the essence of the scientific experiments that were posted for all to see and examine in the room adjacent to main conference room. I may not have understood how certain experimental results were arrived it, but I soon could grasp what were the main conclusions of each posted study. And I asked a lot of questions, the answers to most of which I actually understood.

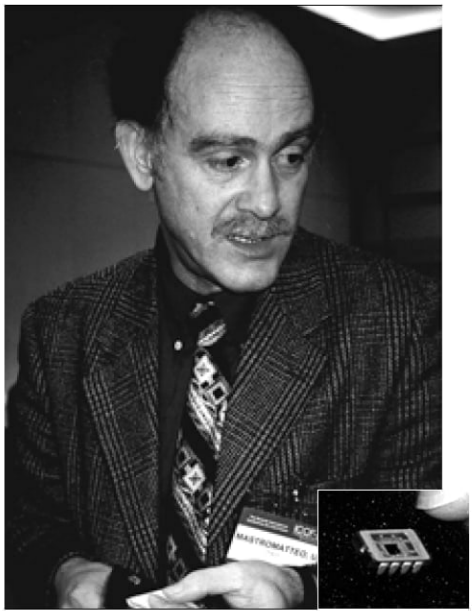

U. Mastromatteo of SGS-Thomson R&D Lab, Cornaredo, Italy is has developed a solid state chip (shown here) for demonstrating microscopic cold fusion effects in gas-loaded nickel. *(Photo: E. Mallove)*

DOE and most of the scientific establishment has

New Energy Times Archive

Dr. Scott Chubb (above) of the Naval Research Lab and his uncle, Dr. Talbot Chubb (NRL retired) apply standard quantum-mechanics to explain cold fusion effects in metal structures. *(Photo: E. Mallove)*

declared cold fusion dead or "junk science." Hence the only people in attendance who represent their view came mainly to debunk and/or harass presenters, or so it seemed to me. One of these critics, Dr. Douglas Morrison, told me he comes to these conferences because he likes to observe "pathological science." It seemed to me that he could have observed more accurately what he came to see by studying his own behavior in a mirror.

I was most impressed by my conversations with government scientists who are continuing to do work in the cold fusion field despite lack of support from their departments or agencies. These include: (1) Dr. Tom Claytor of the Los Alamos National Laboratory, whose low-energy nuclear reaction experiments have led to the creation of tritium; (2) Dr. Mel Miles, a researcher at the U.S. Navy's China Lake facility. His cold fusion experiments are highly regarded in the field. Because the Navy no longer funds cold fusion research, he took a leave of absence to continue his work in Japan; Dr. David Nagel, head of the Condensed Matter and Radiation Sciences Division of the Naval Research Laboratory, who paid for his attendance at this cold fusion conference out of his own pocket because of his belief in the importance of this field of research. His recent paper entitled "The Status of 'Cold Fusion'" is a very thorough technical review of the field, which advocates more funding for cold fusion research so that a number of unresolved questions can be adequately addressed.

MIT's Professor Peter L. Hagelstein thinks he has cracked the cold fusion mystery with a new theoretical model for energy transfer in solids — two cold fusion "miracles" explained with a unified process. *(Photo: E. Mallove)*

I came away from the conference more than ever convinced that this field of science is advancing toward an understanding of the theory and practice of low-energy nuclear energy processes that one day will lead to the creation of very practical non-polluting and highly cost-effective energy devices. That day may come very soon, because one of the scientists at the conference, Dr. Les Case, reported on a process he has created that is a very powerful producer of excess heat and is highly reproducible (i.e. every time it is turned on it produces the same energy results). According to Gene Mallove, this process is producing the results everyone has been looking for. He is very excited about the outcome of a test he made on Case's process April 30, 1998, which indicates that it (1) produces over-unity power, (2) can be made to be self-sustaining in operation, and (3) promises to be scaled-up to produce large amounts of energy. For more information, see Mallove's report elsewhere in this issue.

Dr. Savvatimova (Podolsk, Moscow region) discussed transmutation effects on a glow discharge cathode. *(Photo: E. Mallove)*

Another highlight of the conference for me was the information Dr. Mallove provided about another over-unity device which he has tested. Called the "Kinetic Furnace", it operates

Dr. Melvin Miles discussed puzzling radiation measurements made with cold fusion cells at the U.S. Navy's China Lake facility. *(Photo: E. Mallove)*

Dr. Roberto Monti of Burns Developments (Canada) and Istituto TESRE-CNR, Italy, say that bulk transmutation of radioactive materials is being done right now, as well as stable isotope transmutation by "chemical" means. *(Photo: E. Mallove)*

according to ultra-sound generated "cavitation" processes and is very close to commercial release. Invented and patented by Eugene Perkins and Ralph E. Pope of Kinetic Systems, Inc. of Cumming, Georgia, it produces robust, kilowatt level excess heat. It has been confirmed in independent testing by at least two industrial corporations and at least three independent engineering firms that specialize in measuring the performance of heating and air-conditioning systems. Dr. Mallove and other members of the *Infinite Energy* staff have confirmed the excess heat in a preliminary on-site test and additional tests with very sophisticated instrumentation will be conducted in the near future. A more extensive description of this device can be found elsewhere in this issue.

To sum up, I left Vancouver very optimistic about the future of cold fusion and other new energy technologies. What is most important now is the gathering of the investment capital that is needed to speed up development of new energy technologies and to bring them to market.

I have decided to focus much of my energy on that goal. I am looking for people who want to invest in new energy companies. Now is the time for them to do so, not only because their investments are crucially important for advancement in the field, but because by getting in early, they assure themselves of future profits. At this stage, I am looking for those who can invest at least $5,000 or more. Later on, I am sure there will be opportunities for even smaller investors. If people want to pool their resources to meet current investment requirements, that is something that can be explored. All those who wish to explore investment opportunities, please contact me at 503-297-2424 or via e-mail at kap808@europa.com.

Dr. Tom Claytor (Los Alamos National Laboratory) (center), Dennis Cravens of CETI (L), and Prof. George Miley of the University of Illinois (R) in lobby of ICCF-7's Vancouver Trade and Convention Centre. Were they discussing the future cold fusion propulsion system for the Mercedes Benz automobile on display? Quite possibly... *(Photo: E. Mallove)*

Infinite Energy Magazine will provide more coverage of ICCF-7 papers and happenings in Issue No. 20.

Aspden Patent continued from page 15

Now, there is one important aspect here that tends to be overlooked. How do those protons get created in the first place? The scientific challenge here is not concerned with fusion but rather initial creation and the answer lies in finding the true explanation for what governs the mass of the proton. This is a theoretical exercise in which this Applicant has played an important and recognized part. because. although the world has not rushed into accepting the Applicant's explanation. it is a fact that the precise value of the proton-electron mass ratio of 1836.152 was deduced in terms of the mu-meson field. This derivation involved collaboration with Dr. D. M. Eagles of the then National Standards Laboratory in Australia. It was reported in the U.S.A. Institute of Physics journal *Physics Today* in 1984 (November issue. p. 15)

Relaxing on the Wednesday evening's ICCF-7 dinner cruise in Vancouver harbor. (L to R) Dr. X. Z. Li (Beijing, China); Bill Collis (Italy); Dr. V. Violante (Frascati, Italy); and Prof. George Miley, University of Illinois. Cruising on an infinite fuel supply. *(Photo: E. Mallove)*

Piles of bright yellow sulfur on shore in Vancouver harbor, seen during the ICCF-7 dinner cruise. This sulfur is taken from processed oil from other Canadian provinces—a relic of the Fossil Fuel Age. *(Photo: E. Mallove)*

Aspdent Patent continued

and was mentioned in their 1985 update by the leading U.S. researchers who measure this quantity. See R. S. Van Dyck *et al: International Journal of Mass Spectroscopy and Ion Processes*, 66. (1985) pp. 327-337. They noted how remarkably close the theoretical value was to the one they measured and added 'This is even more curious when one notes that they [meaning this Applicant and Dr. Eagles] published this result several years before direct precision measurements of this ratio had begun.'

Given that the Applicant knows how protons are created from a mu-meson field and taking into account that physicists familiar with quantum electrodynamics know that the vacuum field is the seat of activity of electron and positron creation and that mu-mesons are otherwise known as 'heavy electrons', it needs little imagination then to suspect that Nature is trying to create protons continuously everywhere in space. Since we do not see such protons materializing before our eyes we must infer that they exist only very transiently after creation unless the field medium has surplus energy to be shed over and above its local equilibrium requirements.

This scenario of proton creation and annihilation is no less credible than the accepted scenario of electron-positron creation and annihilation or the equivalent mu-meson activity. We think the electron and the proton have an infinite lifetime because none has been measured, but the true reason for this is that it is impossible to measure the lifetime of something when it gets itself recreated virtually in the same place and immediately. Yet. we know that electrons can decay in association with positrons and we further know that electrons can tunnel through potential barriers with a 10^{-13} second lifetime, so physicists do need to get their picture of these events into proper context.

The proton and the electron are the only types of particle that exist in stable form, simply because they are recurrently regenerating as the primordial forms of matter, as such, in their respective charge polarity states.

Now, given this background knowledge of proton creation, it becomes easier to understand how an atomic nucleus might increment in its nucleon value and without needing an immensely hot background. If a proton were to be created in the very space already occupied by an atomic nucleus one can begin to understand how it might fuse with that nucleus and promote the emission of a beta particle. Almost all the transmutations that are listed

Aspden continues on page 44

New Energy Times Archive

ICCF-7's Big Surprise...

Reproducible Catalytic Fusion Process Announced by Dr. Les Case

Pending Full Validation, Commercial Applications Could Be Very Rapid

by Eugene Mallove

Dr. Leslie C. Case, an experienced chemical engineer with four degrees from MIT, surprised all of us at ICCF-7 by revealing his process of gas-phase "catalytic fusion," which he has developed over the past six years or so. He was inspired by the 1992 work at NTT labs by E. Yamaguchi—helium production and excess heat evolution from Pd in gas-phase cold fusion. (Ironically, Yamaguchi at ICCF-7 was less sanguine about the implications of his own work that can reproducibly generates excess heat from deuterium gas loading of thin-film palladium foil "sandwiches." Yamaguchi is no longer of the opinion that his excess energy is a nuclear effect, but this conclusion may not be correct.)

Dr. Les.Case's Catalytic Fusion cell, a steel gas-tight oval container used as an oxygen bottle in WW-II, sits in resistance coil heating basket (a "resin collar" used by chemists). Gauges on variac AC power supply provide accurate read-out of constant power input to heater. Activated carbon catalyst, loaded to 0.4% with palladium (commercially available) was used in the demonstration by Case at Cold Fusion Technology's lab in Bow, New Hampshire (April 30, 1998). The temperature of the catalyst with deuterium gas was elevated 13.2°C above a baseline, which was carefully established for ordinary hydrogen gas. Dual thermocouple unit (right) confirmed the temperature readings. Pressure gauge on the cell points upward. Valve for gas admission and evacuation goes upward to the right. *(Photo: E. Mallove)*

Even though Case lives in New Hampshire, I did not know about him. He intentionally remained quiet until his international patent announcement appeared last November. But at ICCF-7, he "told all." He has apparently discovered a very narrow range of activated carbon catalysts that are loaded with various precious metals (by weight, in the range 0.1% to 0.5%). Palladium works best so far, he says. By heating these catalysts (no electrolysis is involved), he says that considerable excess heat can be produced reliably when such catalysts are exposed to several atmospheres of heavy hydrogen gas (deuterium gas).

Furthermore, he has developed the all-important *null results* with heavy hydrogen on *inactive* catalysts, which behave in the same manner as exposing them to ordinary (light) hydrogen. This looks like an iron-clad control experiment. We can't see anything wrong with this, so we expect him to go very far, indeed, with his process. It is high-temperature (150 °C to 250 °C or beyond), which means that steam generation and electric power generation can't be far off if the process is confirmed multiple times to be real and robust.

What really astonished me was his demonstration right here in our lab in Bow, New Hampshire on April 30th, just after ICCF-7. He brought most of the equipment over that we needed, I provided the power supply and hydrogen gas tank. The experiment is very simple. Any good high-school or college lab could be up and running with this once it had in hand a tank of hydrogen, a tank of deuterium, and the right catalyst—the supplier of which he has disclosed. The catalysts are commercially available and off-the-shelf! I am so excited, as are others, that I immediately ordered a supply of catalyst to get to work on this.

It was so exciting to see the temperature climb above baseline and persist. As the temperature climbed to over 5 °C above the baseline (control) level, Les said to me with a smile, "We are already in the Promised Land." After 10 °C above baseline was reached, we left the experiment running in the lab and went out for supper. When we returned after an hour and a half later, it had climbed three degrees higher. After a long day of observation and preparation for the full experiment, I was deeply satisfied.

I think this may be nearly the perfect embodiment of the original Pons-Fleischmann idea. It is very clear to me that this is like the heat-after-death phenomenon that so many have reported coming from cold fusion cells: heat production with no input power after the reaction is triggered). The effect has been seen by Fleischmann and Pons (reported in *Physics Letters A*, 1993), and especially in the work of Arata and Zhang (*IE*, Issue #18) with palladium-black material. Motorola in its tests (see *IE* Issue #7) observed a multi-day heat-after-death effect in the Patterson Power Cell. Case has seen the excess heat persist for *weeks* — but unfortunately he has never let it run indefinitely.

Case has confirmed helium-4 production in the reaction by sending samples to Oak Ridge National Laboratory. There should have been more of these tests to be even more certain of the result, but I am satisfied that Case is likely to have helium-4 production. It is at such a level—100 ppm (parts per million), which is way over the 6 ppm in the air—that there is no way that it could be from "contamination." If the Oak Ridge tests were valid, I think he has nailed it. This is the reaction: D + D going to helium-4, plus gorgeous, clean, excess heat.

If replication holds up, it may be absolutely impossible for anyone to deny his process: We told him that because of the incredible hostility to the field and the immense skepticism, he simply *had* to make a device that would self-sustain—that is, employ no electrical heater power. Logically, there should be no obstacle that will prevent him from demonstrating self-sustaining very soon—in the next few weeks. He is working on it right now. Independently, others will be trying to do it too.

New Energy Times Archive

You see, if there is an 8-watt or more excess heat source in the cell we saw with a 13.2 °C elevation above null (this power estimate may be too conservative), there is no reason on God's earth why it should not be able to self-heat if it is simply insulated in a dewar (thermos) or the like. Then one could take out heat and/or make electricity from the heat in a controlled manner.

The most wonderful things about this catalytic fusion:

1. The process appears very well verified by an experienced scientist who has now released the *exact* recipe for anyone to do this — what the critics have been yapping about since Day One. Now the ball is in *their* court. It is *they* who must disprove *him*.

2. The process looks well-positioned to be a simple commercial power-generating technology in small, distributed units, as well as in large power plants

3. Deuterium gas is cheap (the hot fusion boys surely know that; it's what they intended to use for fuel). In theory the 8-watt-plus excess power cell demonstrated in our lab on Thursday has enough deuterium in it to last over 2,000 years at that power level. There is enough deuterium in one cubic kilometer of ocean such that when it is fused to He-4 by hot fusion or Catalytic Fusion (call it cold fusion, if you wish), the energy released equals the chemical combustion energy in all the known oil reserves on Earth.

4. This is an *existence proof*—proof of the more general idea that low energy nuclear reactions without lethal radiation *are* possible. I had already been convinced by the vast body of cold fusion and transmutation evidence, but this could be the nail in the coffin for the critics. It is just too simple a process not to spread like wildfire and gain recognition— much as X-rays did in 1895 after initial skepticism by Kelvin *et al.*

Chemical engineer Dr. Les.Case holds up his original "Mark-I" Catalytic Fusion cell at Cold Fusion Technology's lab in Bow, New Hampshire (April 30, 1998). Earlier that day, a similar cell achieved—and exceeded—the temperature elevation results that Case had predicted. *(Photo: E. Mallove)*

Another interesting fact: Using the catalyst as a cathode in a conventional cold fusion electrolytic cell, Case was able to observe a 3 °C temperature difference between a light water control cell and heavy water. But Case thinks, as would any reasonable engineer, that high temperatures of a reaction a gas process with no finicky electrodes would be preferred in a power generator.

If you are a science journalist, before you write about cold fusion—do your homework and GET THE FACTS!

PRELIMINARY CONFIRMATION TEST OF DR. LES CASE'S CATALYTIC FUSION PROCESS

by Eugene Mallove (April 30, 1998)

This is a very happy day. Dr. Les Case spent a full day here at the lab of Cold Fusion Technology, Inc. in Bow, New Hampshire. He brought his own equipment to demonstrate his "Catalytic Fusion" process, as part of an agreement we made at ICCF-7 in Vancouver, British Columbia last week. I was extremely grateful to him for having spent an entire day here, letting me watch every nuance of how he conducted the experiment. To my satisfaction, the results of today's tests confirm that a very extraordinary new energy source occurs in the reaction of deuterium gas and his specified Pd-activated carbon catalysts. We achieved a persisting excess temperature that climbed to 13.2 °C above the baseline temperature of 178.1 °C.

There is little question that with this kind of dramatic excess temperature, implying a serious excess power source of some low but significant wattage*, appropriate insulation of the cell should lead rather quickly (one hopes) to a self-sustaining device. In fact, Case is working on just such a project using an insulating dewar, which he hopes to complete in the next month. He is being fully open and wants to cooperate with us and others toward making demonstrations and devices so that this effect will become widely accepted. He also is hell-bent to scale-up to make much larger power reactors—multi-kilowatts. It appears that this may be nearly an optimal embodiment of the original Fleischmann-Pons cold fusion process.

(*) With a linear temperature extrapolation from 18 deg ambient and the 92 watt input that heated the cell to baseline temp of 178.1, the 13.2 C elevation above baseline could represent as much as 7.5 watts excess power, but it might be less. It could also be much more. Certainly it is in the multi-watt range.

Testing on April 30, 1998:

Case was here in our lab from 8:45 a.m to 8:00 p.m., so this was a very intense day. I learned a lot more about how he had discovered his process and about he believes it can be further improved and commercialized. We began by weighing out 53.3 grams of G-75D catalyst—that is a 0.4% Pd activated carbon catalyst from: United Catalysts, Inc. (Attn: Douglas Perkins, 502-634-7241) P.O. Box 32370 Louisville, KY 40232

Dr. Case recommends that we and others use the G-75E catalyst, not the "D", because "E" gives a bit better result (it is 0.5% Pd), but it was "D" that we worked with today. I have ordered 100 cc's of the "E" catalyst for our own continued work here. We will make a full-up demo starting precisely with the apparatus seen today. This appears to be such a robust process that any reasonable facsimile will do—but *the* catalyst that he recommends should be the one you start with.

The cell used is an old WW-II short cylindrical oxygen tank of 1.6 liters capacity. This is about 5-inches diameter, 7-inches tall, with spherical ends. On one end a 1/4-inch pipe is affixed leading to a steel rotary valve—a needle valve, I trust. After the valve is a gas fitting termination for alternating connection to gas filling tanks and a vacuum pump. Also welded to the tank near the top is a "half-collar" pipe fitting into which a dial pressure gage is attached.

Also on the top end is a steel thermocouple well welded to the tank—it is about 0.25 inch in diameter. It penetrates the wall at a steep incline toward the bottom and reaches a point from 0.25 to 0.5 inches from the inside tank bottom. The well is closed at its business end. Its purpose is to receive thermocouples for

New Energy Times Archive

measuring the catalyst temperature. I used two K-type thermocouples going to my Fluke -52 meter. I used thermocouple #1 to record data, thermocouple #2 to check against #1 occasionally. They agree to within 0.2 °C or less.

1. First the catalyst is admitted to the cell by removing the dial pressure gage. The gage is put back and the threads sealed with Ace plumber's teflon pipe thread compound.

2. The tank is attached to a vacuum pump (Lammert #10,302) and pumped down. Indication of adequate pumping—only several minutes—is when the pump sound changes to being higher pitched. Others will surely wish to use a vacuum gage, but it is not necessary. The more gas removed each conditioning cycle, the better. The valve is then closed in preparation for admitting H_2 gas.

3. Next are successive cycles of H_2 gas admission, heating, and evacuation. The purpose of this phase, prior to D_2 admission, is to get rid of all residual *chemical* activity. There are oxides and other stuff on the catalyst. By reacting these with H_2, the catalyst is cleaned and prepared.

4. We required three lengthy H_2 cycles today with this new, unused catalyst (If the catalyst had previously been used, it would not be necessary to go through all the cycles). On the first cycle, research grade H_2 was admitted from our pressure cylinder creating 50 psi in the cell (18 °C ambient temperature). The cell is placed in a "resin heater"—which is a glass fabric-coated cylindrical resistance heater measuring 7-inches diameter and about 8 inches tall. The cell sits loosely in this "nest." The power source for the heater was our variac with V and A analog gauges—150 V maximum on voltage scale, 5 A maximum on current scale. We ran at ALL times at 55 V, 1.67 A. ONLY two or three times—and ONLY during the catalyst conditioning phases -- was it necessary to nudge the voltage knob even a tiny bit (less than 0.5 volt) to bring it back to 55 V.

5. The first cycle lasted from 9:47 a.m. to 11:20 a.m. and the ending temperature had stabilized to 183.1 °C for about 9 minutes at the end—pressure and temperature readings were manually recorded at several minute intervals. The temperature stabilizing meant it was time to evacuate and refill—chemical reactions and heating had reached steady state. The unit was discharged to the air—steam and bulk water was visible, as well as old catalyst dust in the valve. This water comes from the combination of H_2 with oxides on the catalyst surface.

6. Evacuation and pump down was followed by H_2 gas refill (53 psi at 102.5 °C starting temperature) for the second cycle. [At each gas fill, Dr. Case bled some hydrogen out of the regulator before opening the valve to the chamber — this is to remove air from the pipe pathway.] This second cycle lasted from 11:25 a.m. to 1:06 p.m. and the temperature stabilized at 182.0 °C for about 8 minutes. Again the gas was exhausted to the air and much less steam—about 10% of the first cycle was noticed.

7. Pump down for the third cycle, admitting H_2 at 50 psi (144.2 °C starting temperature—the power is turned off to the heater and the tank removed from the nest, so it cools down while being evacuated and refilled.) This cycle lasted from 1:10 to 4:07 pm (we had left the lab for about 45 minutes for lunch at the Grist Mill restaurant in Bow, NH). Temperature stabilized at 178.1 °C for the last nine minutes. Dr. Case deemed this the baseline temperature ; he noted no visible steam on exhausting the gas. He noted that the several degrees above this determined baseline temperature could be accounted for by the exothermicity of the chemical reactions.

8. Pump down in preparation for admitting deuterium gas. Fill cell with D_2 gas to 48 psi (start at 145.0 °C) at 4:10 pm. The cell began to heat and by 4:51 had crossed the 178.1 °C baseline and was moving into the nominal excess power regime. Dr. Case noted in advance that he would not be satisfied unless a persisting elevated temperature of at least 5 °C was observed. That has been his criterion over the years for an obvious catalytic fusion active catalyst. We achieved much better than that...

By 5:58 pm. the temperature had reached 188.3 °C—over a 10.2 °C elevation—and it was still climbing. We took a break and went for supper. Returning to the lab, we found at 7:37 p.m. the temperature at 191.0 °C and it was continuing to climb (by 7:42 pm it had reached 191.3 °C)—Case noted that this was to be expected to occur the next few hours and in the *weeks* that these effects have been seen to persist in past experiments. He has held elevations of this sort for at least three weeks, and even then turned the system off *not* because it had failed, but to have the gases tested. He has found from 90 to 100 ppm helium-4 in gas from his cells tested at Oak Ridge National Lab — far above the 6 ppm atmospheric background. Both Dr. Case and United Catalyst's Doug Perkins suggest that it ridiculous to say that He-4 could be liberated from the catalyst—the temperature cycling with H_2 and subsequent evacuations would surely eliminate it even if it were there. The catalyst is made from carbonized coconut shells and Pd—unlikely traps for He-4 anyway. Case has had something like five He-4 tests, but obviously more tests will be in order.

As to the suggestion by some that methane forming reactions can be responsible for the temperature rise— methane does *not* form below 1500 °C according to Doug Perkins. Furthermore, why would they form only with D_2? Finally, chemical reactions from such a small reaction mass could not produce watts of power for weeks on end.

Dr. Case told me that he expected that the elevated temperature would persist for weeks if not months and there might be a further temperature rise. He left me a teaspoon full of unused catalyst as a sample and took his cell back to his lab near the New Hampshire seacoast. I wished we had been able to leave it here, but Case's confidence that we would achieve our own results and see long duration runs was itself impressive. He showed me his "Mark -1" cell design, not much different than what he has now.

Watch our WWW site for further details of testing. We are happy that Scott Little of EarthTech, Dr. Mike McKubre of SRI International, and others will be checking out this process. A large end-user U.S. corporation is also doing so. Based on what I saw today and the lengthy description of how this all came about, I am quite convinced that this is real excess heat that can persist for long periods. I trust that the helium results at Oak Ridge were done properly, which by themselves would confirm the validity of the catalytic fusion process.

Dr. Case says that he has developed his own proprietary catalyst that is better than the available commercial material. He says this new catalyst typically will give temperature rises in the range 20 to 30 °C above baseline. It seems to me, however, that the off-the-shelf G-75D or E should be quite good enough for demonstrations and self-sustaining devices.

Dr. Case means business with this. He is going to ramp up the commercialization of this very rapidly with demonstration units and joint ventures with any power companies—or any other entities—that are willing to climb aboard. He recognizes

New Energy Times Archive

Dr. Les Case admits hydrogen gas from our H_2 tank via a pressure regulator into his prototype catalytic fusion reactor (April 30, 1998). Hydrogen cycling, heating, and evacuation of chemical reaction products is essential to conditioning the catalyst prior to admitting deuterium gas to the reactor. Then the excess temperature effect is seen. *(Photo: E. Mallove)*

that individual dwelling units that heat and generate electricity are going to be a major target. Getting the power density up higher is a key goal for him. He is particularly interested in getting this power source to countries such as China, which are about to do such unfortunate things as blocking the Yangtze River with giant hydro dams.

Dr. Case grew up in Oklahoma, but has lived in Massachusetts and New Hampshire most of his adult life. For a time he operated his own polymer chemistry firm in the Nashua, NH area (Eltron, Inc.). He has taught Chemical engineering at Tufts University and at Purdue University. Dr. Case has four degrees from MIT — two S.B. degrees (Chemical Engineering in 1952, and Industrial Management, as it used to be called), SM in Chemical Engineering Practice, and an Sc.D. in Chemical Engineering. His father was a geochemist who worked in Oklahoma for Gulf Oil Corporation all his life, helping them deal with water pollution problems in water pumped up with the oil.

Dr. Case is well-traveled in Asia and in Europe. His hobbies include classical music and wine tasting! He never misses an opportunity to visit fine vineyards. His late wife was a Ph.D. physical chemist who was born in Philadelphia on July 4th! Her parents were native Germans who returned to Germany, but then after her youth she came back to the US. Case's brother is a retired manager from the General Electric power systems area. All in all, Les Case is a fascinating person and his work is wonderful.

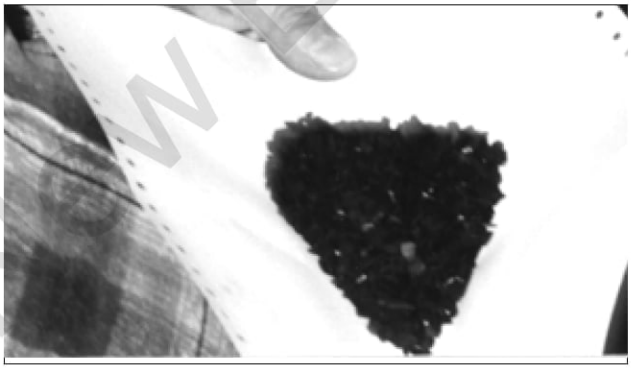

Dr. Les.Case holds paper with 53.3 grams of United Catalysts, Inc. 0.4% Pd-loaded activated carbon catalyst prior to placing it in his Catalytic Fusion chamber during the experiment to demonstrate excess thermal power in Bow, New Hampshire (April 30, 1998). *(Photo: E. Mallove)*

• NOTE: Estimating excess power in the 1.6 liter calorimeter:
55 V X 1.67 A = 91.9 watts input power
178.1 °C - 18 °C (ambient) = 160.1 °C rise for that input power
91.9/160.1 = 0.57 watt/°C estimated calorimeter constant (IF roughly linear — big IF at the high temperature end. The estimate may be too conservative.) Therefore: 13.2 °C elevation X 0.57 W/°C = 7.57 watts estimated excess power.

Description of G-75 series catalyst by United Catalysts, Inc

Typical Chemical and Physical Properties

PALLADIUM ON ACTIVATED CARBON

Effective: 8/12/83
Supersedes: 7/01/80

Catalyst Type.....G-75
Catalyst Form.....Granules
Catalyst Size.....4 x 8 Mesh

Chemical Composition	Weight %
Pd*:	
G-75A	0.10 ± 0.01
G-75B	0.20 ± 0.02
G-75C	0.30 ± 0.03
G-75D	0.40 ± 0.04
G-75E	0.50 ± 0.05
S	<0.05
Activated Carbon	Balance

LOI to Constant Weight at 250fF*.....<5

Physical Properties

A. Bulk Density, lbs./Cu.Ft.....35 ± 3
B. Surface Area, m^2 /g.....600-800
C. Pore volume, cc/g >29.2 Angstroms.....0.20 - 0.30
D. Particle Size, Weight Percent*:
(* properties normally measured by quality control)
Above 4 Mesh .....5% Max.
Through 8 and on a 10 Mesh.....10% Max.
Less than 10 Mesh .....3% Max.

Top view of the Catalytic Fusion cell test set up at Cold Fusion Technology's lab in (April 30, 1998). In the background to the right are a Ragland triode cell (see Issues # 12,13), and a Cincinnati Group transmutation cell. *(Photo: E. Mallove)*

ORDER NOW! MORAY B. KING'S BOOK

"TAPPING THE **ZERO-POINT ENERGY**"

$12.95 No. America;
$17.95 Other Foreign
(IncludesFirst Class postage/Airmail shipping)
Order from: Cold Fusion Technology
P.O. Box 2816
Concord, NH 03302-2816

New Energy Times Archive

Dr. Case's ICCF-7 Paper as Submitted:

CATALYTIC FUSION OF DEUTERIUM INTO HELIUM-4

by L. C. Case, Sc. D.
Fusion Power Inc., Newfields, NH

Long empirical study has defined one specific set of experimental conditions under which D_2 reproducibly undergoes nuclear fusion under mild laboratory conditions.

Gaseous D_2 is contacted with a supported metallic catalyst at super-atmospheric pressure, and about 130-300 °C. The catalyst is a platinum-group metal, at about 1/2% to 1% by weight, on activated carbon. Pd, Pt, Ir and Rh all work, and Ru has not been carefully studied yet. (Pd is preferred). This type of PGM on activated carbon is one of the standard heterogeneous catalysts employed in the chemical industry, but the useful range of PGM content is much narrower than is known to be generally useful. Also, many other types of supports are sometimes useful in general catalytic applications, but none of the others—such as silica, alumina, ceramics, kieselguhr, etc.— appear to be useful for D_2 fusion.

This fusion process does not produce neutrons, helium-3, tritium (or, presumably, hydrogen), but instead produces only helium-4. The fuel gas from long-term runs has been analyzed by a large, magnetic-sector, mass spectrograph to contain very roughly 100 ppm of helium-4, which was not present in the research-grade D_2 fuel.

The reaction is: $2D \rightarrow$ He-4 + 24 MeV.
The energy thus produced is enormous, and because deuterium is very cheap in the form of heavy water (less than $1/gm.), the fuel cost for this process is very low indeed (much less than 1 cent per KWH).

This process has promise for low cost production of heat and power on a large commercial scale, and the oceans contain enough deuterium, as heavy water, to satisfy the earth's energy needs for many millions of years. An international patent application, Serial No. WO 97/43768, was published November 20, 1997.

Once scale-up is successful, the bottleneck obviously will be the enormous amount of PGM needed for a working, commercial scale power plant, and the ensuing impact on the PGM markets. (Very roughly, one commercial power plant will require 1% of the world's annual production of Pd).

The mechanism of this fusion reaction is not known. Obviously, it is very specific, and quite different from those of the usual heterogeneous catalysis. Important facts, which must be explained by any successful mechanism are:

a) Only the reaction $D + D \rightarrow$ He-4 occurs

b) The only generally successful catalysts are about 1/2% to 1% PGM on activated carbon

i) Other substrates do not appear useful

ii) Pd, Pt, Rh, and Ir all work

c) The reaction occurs only in the range of about 130 - 300 ° C, with activity peaking at about 250° C.

d) The effect of pressure on reaction rate is small.

Some of the previously positive results of other investigators in the field of deuterium fusion may have depended on this particular mechanism, or may not. Clearly, any other study which produced neutrons, tritium, or He-3, reveals some other mechanism. And there seem to be instances of such in the literature. It seems too early to speculate on just how many different such fusion mechanisms have been reliably determined, and indeed how many are in fact catalytic in nature, and if not catalytic, then what?

The actual equipment employed is shown in the exhibited photograph. The reaction vessel is a 1.6 liter WW II 304 SS oxygen bottle, modified by welding to include:

a) a half-collar loading-unloading port

b) a pressure gauge with inlet-outlet valve

c) a thermowell reaching near the bottom of the reactor

d) a heating mantle

e) a steam tube in the form of an internal "V".

In operation, about 50 to 100 g. of the candidate catalyst is loaded into the vessel, and the loading port sealed with pipe dope. The reactor is then evacuated, and loaded with hydrogen to about 30 to 50 psig. Then, the reactor is heated (with constant voltage on the heating mantle) to about 200 to 225 °C for a period of several hours. The reactor is then vented and evacuated, and the process repeated, until a constant temperature is reached in the thermowell. Then, the vessel is vented and evacuated, and the process is repeated with deuterium gas in place of the hydrogen, and then repeated once more with deuterium. If the temperature reached with deuterium is at least about 5 ° C more than with hydrogen, the catalyst is deemed specifically active for D_2 fusion. In fact, temperature differentials between D_2 and H_2 of greater than 20 °C have sometimes been reached.

Fusion Power, Inc. offers two products to assist others in the laboratory fusion of deuterium:

1) A Pd on activated carbon catalyst optimized for greatest activity.

2) Electrodes developed for large effects in the electrolytic fusion of heavy water (Pons-Fleischmann process).

Acknowledgement

The long-term and patient assistance of the Nuclear Centre, Charles University, Prague, and especially of Drs. Zdenek Dolezal and Ivan Wilhelm, is gratefully acknowledged.

The critically important analytical assistance of Lockheed-Martin, Oak Ridge, and particularly of Drs. Len Marshall and Roger Ray, is gratefully acknowledged.

COMMENTARY by Jed Rothwell, April 26, 1998:

L.C. Case: Gas loading with commercial hydrogenation catalysts consisting of ~1% palladium on activated carbon. The cell must be maintained at a temperature between 150 and 250 °C, no higher or lower. It is first loaded with hydrogen, which cleans the catalyst and purges oxygen. It is then evacuated and loaded with deuterium. The temperature rises 5 to 30 °C over the baseline temperature established with hydrogen, indicating 10 to 30 watts of excess heat.

The excess heat lasts for weeks. Case has never let it run indefinitely. He quenches the heat by letting the cell cool. The experiment has been repeated dozens of times successfully. Dr. Dennis Cravens commented that the treatment with hydrogen may be important. It serves as a null run and it cleans the catalyst. Someone asked Case whether the hydrogen blanks might be producing heat. He responded that he would have no way of telling; he only knows that deuterium is much warmer. (He ignores differences less than 5 °C.) I was suspicious that this might be an artifact of the different heat-conduction coefficients of deuterium and hydrogen. Such problems were reported by Mizuno, Oriani and others working with gas calorimeters. I asked Case about the position of the thermocouples, gas pres-

New Energy Times Archive

sure, calibration techniques and the cell wall temperature. I am satisfied this type of artifact is not a factor.

In his conference summation, Mike McKubre of SRI International cited this as one of the most significant papers because Case appears to have developed a 100% reproducible process, and because he is willing to publish all details about experiment. Mallove and I agree that this may be the most important experiment in cold fusion. At present, Case uses an uninsulated

Dr. Leslie Case's "Mark-I" Catalytic Fusion Test Device:
A 1.6 liter WW-II oxygen bottle with pressure gauge and valving for vacuum pump attachment and H_2 and D_2 gas addition. The cell sits on a laboratory resistance heating pad. Wire is the thermocouple lead that penetrates via a steel tube thermowell to the catalyst bed near the inside bottom of the cell. Two open-ended pipes on top of cell were intended to admit water to make steam! The original cell was powerful, but not enough to make steam while sustaining the reaction.
(Photo: Courtesy Dr. Leslie Case)

steel cell which he holds at the critical temperature with an electric heater. We advised him to move the cell to an insulated container, perhaps a Dewar, and to turn off the electric heater once the reaction begins. If this is a genuine cold fusion excess heat reaction, the cell should self-heat and remain hot indefinitely with no input, probably for years. This test would do away with the need for calorimetry and resolve all doubts about the existence of the excess heat.

Case is a chemical engineer who has decades of experience working with these catalysts. He scoured the catalogs and requested sample materials from several chemical companies. He tested numerous samples at different temperatures and pressures, in an Edisonian search for one that would rapidly absorb deuterium and develop excess heat reliably. He finally found a particular type of catalyst that is available from three suppliers. He has filed for an international patent [See PCT reproduced here.], which requires that all details be revealed even before the patent is granted. Case has agreed to bring his cell to Mallove's laboratory in Bow, New Hampshire Thursday (April 30, 1998) for independent verification. The materials in this cell simple and cheap. The chemical companies can supply tons of the catalyst, and only 50 to 100 grams of the catalyst is need for each small cell, so this would make an ideal demonstration cell. If we determine it works, we hope to license the device, manufacture and help Case sell hundreds of demonstration kits within one month. We move fast here at *Infinite Energy*!

Case took samples to Prague where he rented the use of a nuclear research laboratory for a week to search for neutrons with deuterated catalysts, but after extensive research, he determined there are none. Case took a cell that had run for weeks to Oak Ridge National Laboratory. They found 100 ppm helium in the used gas.

Case Patent continued from page 40

11. The process of Claim 1 wherein the operating pressure is less than about 100 [Psia? -- This was cut off in my PCT copy. —EFM]

12. The process of Claim I wherein the said metallic catalyst is located in a fixed bed surrounding heat-transfer tubes, with the fuel gas being circulated through said bed.

13. The process of Claim 1 wherein the said metallic catalyst is located in a fluidized bed surrounding heat-transfer tubes, with the fuel gas being circulated through said bed.

14. The process of Claim 4 wherein helium of mass 4 is co-produced along with the energy.

15. The process of Claim 14 wherein the said fuel gas is commercial-grade D_2.

16. The process of Claim 14 wherein the said fuel gas is D_2 produced by electrolysis of reactor-grade heavy water.

17. The process of Claim 14 wherein the metal of the said metallic catalyst is selected from the group consisting of Pd, Pt, Rh, Ru, Ir, Re, Ni, Ti, and the rare earths.

18. The process of Claim 14 wherein the metal of the said metallic catalyst is selected from the group consisting of Pd, Pt, Ru, Rh, Re, and Ni.

19. The process of Claim 14 wherein the said metallic catalyst is on a support selected from the group consisting of activated carbon, graphite, silica, alumina, kieselguhr, zeolite, and clay.

20. The process of Claim 14 wherein the said metallic catalyst is located in a fluidized bed surrounding heat-transfer tubes, with the fuel gas being circulated through the said bed.

Do it—please!
Write a letter about cold fusion and new energy to your Congressman, Senator, President, Vice President, favorite Candidate, or Prime Minister.
Then send it to us! O.K.?

New Energy Times Archive

Dr. Leslie Case's PCT International Patent Notice for Catalytic Fusion

"COPRODUCTION OF ENERGY AND HELIUM FROM D_2"

PCT WORLD INTELLECTUAL PROPERTY ORGANIZATION
International Bureau

INTERNATIONAL APPLICATION PUBLISHED UNDER THE PATENT COOPERATION TREATY (PCT)

(51) International Patent Classification [6]:

G21B 1/100

(21) International Publication Number: **WO 97/43768**

(43) international Publication Date: 20 November 1997 (20.11.97)

(21) International Application Number: PCT/US97/08033

(22) International Filing Date: 12 May 1997 (12.05.97)

(71)(72) Applicant and inventor: CASE, Leslie, C. [US/US]; 14, Lockeland Road, Winchester, MA 01890 (US).

(74) Agents: CESARI, Robert, A. et al.; Cesari and McKenna, LLP, 30 Rowes Wharf, Boston, MA 02110 (US).

(81) Designated States: AL, AU, BB, BG, BR, BY, CA, CN, EE, GE, HU, IL, IS, JP, KP, KR, LK, LR, LS, LT, LV, MD, MG, MK, MX, NO, NZ, PL, RO, RU, SG, SI, SK, TR, TT, UA, UZ, VN, ARIPO patent (GH, KE, LS, MW, SD, SZ, UG), Eurasian patent (AM, AZ, BY, KG, KZ, MD, RU, TJ, TM), European patent (AT, BE, CH, DE, DK, ES, FI, FR, GB, GR, IE, IT, LU, MC, NL, PT, SE), OAPI patent (BF, BI, CF, CG, CI, CM, GA, GN, ML, MR, NE, SN, TD, TG;).

Published
With international search report. Before the expiration of the time limit for amending claims and to be republished in the event of the receipt of amendments.

(54) Title: **COPRODUCTION OF ENERGY AND HELIUM FROM D_2**

(57) **Abstract**

It has been discovered that energy can be reliably produced by contacting deuterium, in the gaseous state, with a particularly active metallic catalyst, at an elevated temperature. The product of this process is helium of mass (4). Thus, the reaction appears to be D + D →He-4 + 24 MeV. Only some fraction of metallic "hydrogenation" catalysts are active in this process, and it has not been possible to predict in advance which candidate catalysts will be active, so a simple screening test has been devised to identify the specifically active catalysts. The most promising catalysts for this process may be certain types of supported platinum-group metals. Palladium appears to be a favored metal, although platinum, and possibly other PGMs are also active. It is envisioned that the procedure can bc scaled up to produce commercial-scale energy by running steam tubes through the catalyst bed, and removing the heat produced in the form of steam.

WO 97/43768 **PCT/US97/08033**

COPRODUCTION OF ENERGY AND HELIUM FROM D_2

BACKGROUND OF THE INVENTION

It is now well recognized that various nuclear fusion reactions of D, or D + T, can yield quite large quantities of energy, and that such reactions are very promising for long-term energy production, because of the very substantial D content of natural water, most particularly sea water.

Very considerable sums of money have been expended in the study of the possibility of controlled plasma fusion of this type, and lesser sums on laser-initiated fusions. The results are positive, but it is clear that we are a long time away from, and vast sums of money short of, practical results here.

In the last few years, a number of investigators have looked at the possibility of obtaining such a fusion under relatively mild laboratory conditions, achieving "cold" or "anomalous" fusion. Numerous indicative, or possibly positive, results have been obtained, but have not been reproducible, or positive enough, so as to be generally recognized. I believe that the most clearly positive prior work is that of Yamaguchi (*Jpn. J. Appl. Physics*, 29 (1666, (1990)), but neither Yamaguchi himself, nor anyone else, has yet reported reproducing this work.

It is well known to chemists that metallic catalysts can strongly interact with the electrons of the hydrogen molecule, apparently leading in some cases to activated molecules or even atoms adsorbed on, or in, the metallic catalyst. For some time, I have focused on the possibility that certain catalysts might so activate deuterium (heavy hydrogen) as to cause the nuclei to self-react, or fuse, once the protecting electron clouds are highly disturbed, or removed. And I believe that such an effect might have been the actual cause of Yamaguchi's fleeting success, and possibly some of the other possibly "cold fusion" indicative results.

Many months ago, I started obtaining indications that D_2 gas can be caused produce energy by contacting with various metals known to be active "hydrogenation" catalysts. The procedures improved with experimentation, but remained erratic and unpredictable.

I have now determined that energy may be produced on a continuous basis by contacting a specifically active catalyst with a gas comprising D_2, at temperatures at least about 130 °C.

Because only some proportion of hydrogenation catalysts are active in this process, I have devised a screening process whereby to identify those catalysts which are specifically active. That screening process consists of the side-by-side, or sequential, contacting of the reduced, and devolatilized, catalyst with H_2 and D_2 gases at about 1 to 3 atm. gauge pressure, and about 150 to 200 °C. Those catalysts which are specifically inactive show no incremental temperature differential between H_2 and D_2. The specifically active catalysts show an increased temperature due to the D_2 of at least about 2 °C., and preferably greater than 5 °C., compared to the H_2.

I have found that the only product of this catalytic self-reaction is mass-4 helium. No appreciable quantity of neutrons, or tritium, or mass-3 helium are produced. This is highly unexpected, and contrary to published discussions of possible fusion reactions of H, D., and T.

SUMMARY OF THE INVENTION

After much experimentation I have:

1) Discovered the general conditions under which energy may be conveniently obtained by apparent catalytic self-reaction of deuterium;

2) Established a screening procedure by which those catalysts which are specifically active in this procedure are identified;

3) Determined that the (exclusive) product of said catalytic fusion is mass-4 helium.

DETAILED DESCRIPTION OF AN ILLUSTRATIVE EMBODIMENT

This application is a continuation-in-part of my prior applications Serial No. *[Note: There follows one line of blurred numbers in my copy of this PCT. —EFM.]* 07/830,718, filed 2104/92; Serial No. 08/135,021, filed 10/13/93; Serial No. 08/188,948, filed 01/27/94, Serial No. 08/262,777, filed 6/20/94; Serial No. 08/459,763, filed 06/02/95, and all applications of which these applications are continuations-in-part, each and all of which applications are incorporated herein by reference.

My first positive results were obtained by pressuring certain metallic catalysts with D_2 gas, and then devolatilizing, thus following on, and confirming, the results of Yamaguchi. But this is necessarily a batch process, did not yield large amounts of energy, and therefor had little promise for large-scale use.

I have now found that it is possible to produce large amounts of energy (much greater than 1 watt), on a continuous basis, by contacting a gas comprising D_2 with a specifically active hydrogenation catalyst at a temperature of at least about 130 °C.

1. General Procedure and Useful Materials

The most important element of the instant invention is the discovery and identification of specifically active metallic hydrogenation catalysts. There are innumerable candidate such catalysts, and only some relatively small proportion thereof, is specifically active in the instant process. Central to this invention was the determination that such specifically active catalysts do exist, and that identification thereof is an empirical process, wherein many negative results may be traversed before positive results occur. And so far, there is no reliable guide to make an a priori selection among the candidates.

The most easily categorized specifically active catalysts are the supported platinum-group-metal (PGM) hydrogenation catalysts, already well known to be active catalysts, and widely used in the process industries.

New Energy Times Archive

Those PGM's most widely used are Pt and Pd, of course, although Rh and Ru may be used, and even sometimes Ir. Both Pt and Pd have been found to yield specifically active catalysts, with indications that Rh is also useful. Ru, when and as identified as a specifically active metal, may be preferred because of its very low cost, and potential durability in use.

The platinum group metals may indeed be specifically active in other forms, such as Pt or Pd black, or as sponge, and so forth.

Supported Ni catalysts are also widely used in the process industries, although generally not nearly so active as the PGM catalysts. Ni, when and as identified as specifically active in the instant invention, would be a preferred embodiment, because of the very low cost and wide availability compared to the PGM's. The various supports may be those used for the PGM's. In general, however, the level of Ni loading is higher than for the PGM's, being usually greater than 10%. Raney Ni is also sometimes used in the process industries, and would be similar in utility to the supported Ni catalysts, when and as identified as specifically active.

Various other metals are known to be active hydrogenation catalysts, and might be found to be specifically active in some embodiments. Of possible utility are supported Re, Raney Co, and Ti, and the rare earths in various forms.

It is well known that mixtures of various metals are sometimes specially active hydrogenation catalysts, and thus might be promising specifically active catalysts. Of particular interest would be mixtures of the PGM's with each other, and with Re.

The supporting material may be any one of those known and commonly use. such as activated carbon, graphite, alumina, silica, kieselguhr, clay, zeolites, and so forth.

It is known that about a 1/2% to 5% loading of metal on the support (preferably about 1%), and that an activated carbon support, is very useful in various hydrogenations, and so it is that both 1% Pd and 1% Pt on activated carbon have been found in some instances to be specifically active. Pd seems more active that Pt.

The specifically active catalyst may either be in powdered or otherwise finely divided form, or may be in the form of porous aggregates, such as pellets or cylinders. It is critical that the catalyst must be able to absorb or adsorb a large quantity of the fuel gas comprising D_2.

The fuel gas to be contacted with the specifically active catalyst comprises D_2. The actual D_2 content need not approach 100%, however. An atomic proportion of the dilution effect of H_2 become large enough to slow down the reaction notably. Any content of O_2 in the fuel is detrimental, because it catalytically reacts with D_2 to form D_20, which may be inactive. And H_20, HDO, and D_20 are undesirable, because they may preferentially occupy the specifically active sites, preventing the desired self-reaction of D_2.

N_2 seems to serve merely as a diluent in the fuel gas, and has almost no effect in any reasonable proportion. CO may also sometimes be only a diluent. CO_2 may preferentially occupy active sites and may be undesirable. But both CO and CO_2 are unlikely major constituents of any fuel gas.

He being the product of the instantly desired reaction, might seem to be an important, and negative component of the fuel gas. But it appears that the extreme vigor of the desired reaction causes such localized disruption, on an atomic scale, that He is released, rather than being trapped in the catalyst. Thus, He seems to serve merely as a diluent, as does N_2. Only when the fuel gas reacts to such a degree that the He content rises to 5%, or 10%, or more, is it desirable to institute some sort of bleeding of the contaminated fuel gas, and replenishment by fresh D_2.

Most (or all) of the commercially available deuterium gas seems quite satisfactory as fuel. Research and CP grades are perhaps unnecessarily pure, and more costly.

The temperature under which the instant self-reaction is conducted is important. At a temperature level of 150-200 °C., the reaction proceeds at a reasonable rate, and the temperature level is high enough so that heat can be transferred to water, creating steam—being that highly desirable vehicle whereby to power turbines, or to carry energy from place to place. At temperatures less than about 150 °C., the desired reaction is slower, and the temperature difference to create steam impractically low. But the operational temperatures may desirably be quite higher than 200 °C., if desired. Surprisingly, the D_2 fuel may remain in close association with the catalyst at temperatures even well in excess of 200 °C.; and even at temperatures favoring devolution of the D, from the catalyst, increased pressure may be employed to counter the trend. Thus, the upper limit on this reaction may be set by the strength of the materials used, and may extend to 300 °C., or 500 °C., or even higher.

The pressure used in this process is not so important as the temperature. Especially at the lower operating temperatures of 150-200 °C., the fuel is highly absorbed in, or adsorbed on, the catalyst even at 1 atm. absolute. And some of the active catalysts so strongly attract the fuel that a partial vacuum may appear. Thus it is that a wide range of pressures may be usefully employed. Sometimes a partial vacuum may be present. Generally, 1-10 atm. absolute is easily obtained, easily contained, and useful. Under special conditions, pressures up to 100 atm. or higher may be desirable, and useful.

The apparatus used is generally any leak-tight container capable of-temperature and pressure regulation, and fitted with tubes through which to circulate water, or other heat-transfer fluid. The specific configuration may vary widely.

There are, however, three factors governing the design of apparatus.

1) As indicated, the catalyst must be in good thermal contact with the tubes carrying heat-transfer fluid ("steam tubes"), so as to facilitate removal of the energy generated.

2) The catalyst must be in good contact with the fuel gas, so as to replenish the fuel converted. This generally may mean that the catalyst lies only in a thin layer, with all same being near to a gas-catalyst interface. A layer about one inch thick is approximately the upper limit in this sense.

3) Insofar as it is difficult to design a reactor having a large, thin surface of catalyst contacting the fuel, it is preferred that the fuel be continuously fed through a bed of the catalyst. Thus, the preferred reactor design is either a stationary (or preferably a fluidized) bed of catalyst surrounding and in close contact with the heat transfer tubes, and through which the fuel gas is circulated under forced draft, to ensure continuous contact between catalyst, and fresh fuel.

Because the instant self-reaction of D_2 produces only He, and no neutrons, tritium, or other radioactivity, the materials of construction can be simple steel, even embrittlement). At most costly, 302 or 304 stainless steel may be advantageously employed. Exotic materials, such as 316 stainless, or zirconium, are quite unnecessary. And because the product is helium, a most inert and benign gas, the process produces no dangerous effluent, (being even much less damaging to the environment than CO_2). Thus, after processing the bled material to recover useful D_2 fuel, the product He can even be vented to the atmosphere, if desired, as it generally will be.

Incidentally, the instant process, apparently by the reaction D + D → 4-mass helium, evolves almost 24 MeV, which is a huge, and extraordinarily favorable amount of energy. Indeed, this reaction appears certain to be the most energetic reaction ever conducted by man on a macroscopic scale. (There are only few possibly more energetic reactions, such as matter-antimatter extinction, but these can never be run on a macroscopic scale on earth).

2. Screening Procedure for Specifically Active Catalysts

Because there is an infinity of possible catalysts, and only a small proportion of the infinity proves specifically active, a simple, easily conducted, screening procedure is essential for the practical application of the instant invention. Even when one starts with those most promising candidates, the supported PGM hydrogenation catalysts, by no means are all specifically active, so the screening procedure is necessary, to avoid endless experimentation with uniformly negative results. Indeed, after 3, or 10, or 100, negative results, and that even after initial encouragement, most researchers would give up and try something else. And this factor may well already have been "decisive" in many previous attempts at "cold" or "anomalous" fusion.

The instant invention relies on such a screening test. That test need not be exact in detail, but must involve contacting the reduced, devolatilized candidate catalyst with gases, comprising H_2 and then D_2, at a temperature between about 150 °C. and 200 °C. (higher temperatures can be used, but are unnecessary), and initially at 1-3 atm. absolute (the pressure will generally change as the test proceeds). The catalyst must be in the reduced state, so as not to react with H_2, and give a false reference temperature partially dependent on the reduction reaction. And the catalyst must be devolatilized so as to be able to absorb, or adsorb, the fuel gases.

The experimental device is brought into a stable temperature state using the H_2 reference gas, said stable temperature being the "reference" temperature. Then the H_2 gas is devolved by pulling a good vacuum for some minutes (some catalysts are quite reluctant to devolve adsorbed or absorbed H_2). Then the experiment is repeated, employing the same apparatus, heat input, and configuration, but with D_2 instead of the H_2.

If the temperature eventually reached with D_2 is about the same as reached with H_2, or less than about 2 °C. greater, the catalyst candidate

New Energy Times Archive

is deemed not specifically active (it is fairly difficult to be certain that anything much less than 2 °C. is a genuine result, and not merely some experimental artifact). If the temperature reached with D_2 is at least 5 °C. greater than that with H_2, the catalyst is clearly specifically active. And temperature differences greater than 10 °C. have been measured in practice.

Although by no means the only suitable screening apparatus, I suggest the following apparatus and procedure which I have successfully used:

I have modified a 1.7 liter WW II oxygen bottle with an inlet-outlet valve and pressure gauge fitted to the single standard pipe female outlet, a larger pipe female outlet for adding and removing solids, a thermocouple well reaching near the bottom of the vessel, and a flask heating mantle which neatly fits the bottom of the 300 series stainless gas bottle.

Enough of the candidate catalyst is added so as to cover the end of the thermocouple well, and apparatus is sealed, and then a vacuum pulled with a good mechanical pump. H_2 gas is added to about 2 atm. pressure, the temperature raised over about one hour to about 125 to 150 °C., and the vessel evacuated again. H_2 gas is then added again, the temperature raised, and the cycle is repeated if necessary until it appears that the temperature reaches a steady state, indicating that the catalyst has been reduced (if necessary) and all water devolved.

Then, the cooled vessel is filled with 2 atm. of H_2, and the heating jacket is heated with a specific value of volts and amperes (in my case, about 50 V. and 1.5 A., and the temperature observed until it reaches a level which remains steady for at least about one hour, in the range of about 150-200 °C.

The vessel is then carefully devolatilized by pumping off the H_2, and cooled. Then 2 atm. of D_2 gas is added, and the heating jacket heated with the same value of volts and amperes. The temperature is then carefully followed until it reaches a reasonably steady level, usually in one or 2 hours. If the observed temperature is well in excess of that reached with H_2, then there is apparent reaction with D_2 which does not occur with H_2, and the catalyst is deemed specifically active.

This procedure may seem too simple and unrefined, but it is reliable. I have sometimes switched back and forth between H_2 and D_2, confirming the initial result. And the test may discriminate between different lots of the same catalyst.

The specifically active catalysts never reach a totally stable temperature with D_2, said temperature always slowly increases over weeks of time.

3. The Instant Procedure Makes Only Mass-4 Helium Product

I have made a large-scale test in an important facility well equipped and experienced to determine neutrons. When we finally reached a quiet time, with no interference, there were no neutrons above background for many minutes. Thus, the reaction D + D → n + helium-3 does not occur.

And I have analyzed for tritium. The tritium content of a product from a weeks-long run was found to be about equivalent to that of distilled water, in fact, with no indication of tritium added in process. Thus, the reaction D + D → H + T does not occur to any appreciable extent. Theory has it that this reaction should occur to an extent equal to that yielding n + helium-3, and the fact that both are zero cause no conflict with theory.

After difficulty, I obtained access to a large magnetic sector mass spectrograph calibrated to carefully sort out low-mass atoms. The sample I sent was diluted with several parts of air to actual sample (during poor handling) so the resulting analysis showed much air. But about 100 ppm. of mass-4 helium was analytically found. The amount corrected for the leak roughly corresponded to the upper limit of helium calculated from a heat balance, based on temperature increase when replacing H_2 with D_2.

Insofar as the amount of helium found, about 100 ppm., is far higher than that found in air, the result seems conclusive, clearly demonstrating that mass-4 helium is produced, in important amounts, apparently being the only elemental product. So it seems.

EXAMPLE 1

Into a 300-series stainless steel bottle of 1700 ml. volume, fitted with pressure gauge, thermowell reaching to near the bottom of the bottle, an inlet-outlet valve, and 3/4" plugged opening for addition and removal of solids, and heated on the lower outside and bottom by a hemispherical, electrically-heated heating mantle, was placed 28.0 g. of 1% Pt on activated carbon, of 62% H_20 content, and being very fluffy and light weight.

The vessel was then sealed, and alternatively heated to about 100 °C., and evacuated with a good mechanical vacuum pump, until the pressure in the vessel at 100 °C. was much less than 1 psia. Then the vessel was filled to 32 psia with high purity (grade 4.7) hydrogen gas.

After heating for several hours, at 60 V. on the heating mantle the vessel stabilized at 156 °C. and 18.5 psia.

Then the vessel was evacuated well with the mechanical vacuum pump, and filled to 32.5 psia with grade 2.5 deuterium. The vessel was then heated again for several hours, and at 60 V. on the heating mantel, the vessel stabilized at a temperature of 166 °C.

The current to the heating mantle was 1.79 A for the H_2 run, and 1.78 A for the D_2 run, thought to be indistinguishably different. The temperature difference for D_2 over H_2, at the same power input is 10 °C., corresponding to a few watts of power generation.

On maintaining the voltage at 60 V. for many days, the temperature vessel containing D_2 increased another one or two °C.

EXAMPLE II

Example I was repeated using 21.9 g. of 1% Pd on activated carbon, of 55% H_2O content, and the same procedure to remove the residual water from the catalyst.

With hydrogen, the vessel stabilized at a temperature of 152 °C., and 31 psia, at 60 V. on the heating mantle.

With deuterium, the vessel stabilized at 167.5 °C and 39.5 psia, at 60 V on the heating mantle.

The incremental temperature difference between H_2 and D_2 was thus 15.5 °C.

EXAMPLE III

Example I was repeated, using 19.2 g. of 5% Pd on activated carbon, of 38% H_2O content, and the same procedure to remove the residual water from the catalyst.

With hydrogen, the vessel stabilized at a temperature of 165 °C., at 60 V. on the heating mantle.

With deuterium the vessel stabilized at a temperature of 169.5 °C., at 60 V on the heating mantle.

Thus, the incremental temperature differential between H_2 and D2 was 4.5 °C., just on the borderline of demonstration of specific activity. There is some indication that 5% Pd loading is less effective than 1% Pd.

EXAMPLE IV

Example II was repeated using a very similar, but different, 1% Pd catalyst. The temperature reached with H2 and D2 was almost the same, thus showing no specific activity.

CLAIMS

1. The process of producing energy which comprises contacting a fuel gas comprising D_2, and a specifically active metallic hydrogenation catalyst at a temperature greater then about 130 °C.

2. The process of Claim I wherein the said fuel gas is commercial-grade D_2.

3. The process of Claim 1 wherein the said fuel gas is the D_2 produced by electrolysis of reactor-grade heavy water.

4. The process of Claim I wherein the temperature is greater than 150 °C.

5. The process of Claim I wherein the metal of the said metallic catalyst is selected from the group consisting of Pd, Pt, Rh, Ru, Ir, Re, Ni, Ti, and the rare earths.

6. The process of Claim 5 wherein the said metal is selected from the group consisting of Pd, Pt, and Ru.

7. The process of Claim 5 wherein the said metal is Pd.

8. The process of Claim 5 wherein the said metal is Ni.

9. The process of Claim 5 wherein the said metallic catalyst contains a mixture of two or more metals selected from the group consisting of Pd, Pt, Rh, Ru, Ir, and Re.

10. The process of Claim 5 wherein the said metallic catalyst is on a support selected from the group consisting of activated carbon, graphite, silica, alumina, kieselguhy, zeolite, and clay.

Continues on page 37

New Energy Times Archive

ICCF7- Poster Paper

CAVITATION IN D_20 WITH METAL TARGETS PRODUCES PREDICTABLE EXCESS HEAT

by Roger Stringham*, John Chandler, Russ George, Tom Passell, and Dick Raymond

*Ph: 650-960-0401; Fax: 650-851-8489

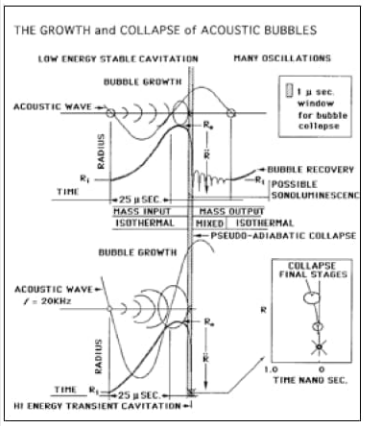

Figure 1

Two types of bubble systems are the stable and the transient cavitation systems. The parameters of vapor pressure, external pressure and acoustic amplitude determine the type of bubble produced (Figs. 1 - 3).

The bubble gains mass from the liquid then collapses pseudo-adiabatically in less than a μ second.

The collapse of the bubble radius may produce bubble volume changes of 1,000,000/1. These changes convert the bubble's D_20 content to a very high D^+ density plasma.

During the TCB (Transit Cavitation Bubble) collapse (Fig. 4) the two main shock waves are the bubble interface (or shell) described as R(t) and the internally developed shock wave r(t). The two shock waves accelerate to the center of the bubble where the TCB violently disintegrates. In between the shock waves is a non communicating zone in color that is D20 dissociated and ionized and is separate from the bubble central contents in blue(shaded background, Fig. 4).

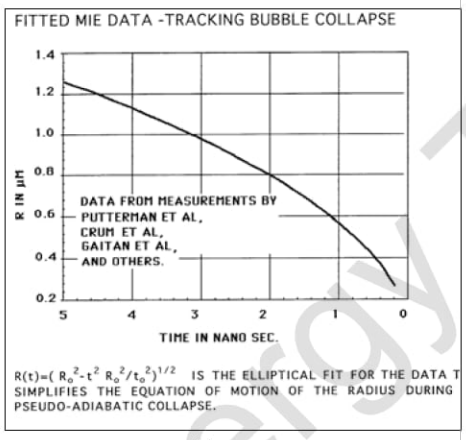

Figure 2

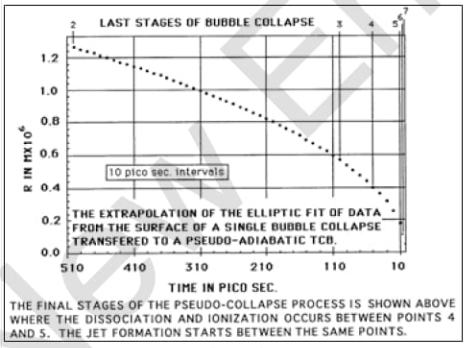

Figure 3

At a point in time during the TCB collapse where R(t) = Mach 1 another shock wave, r(t), forms and also moves towards the bubble center at a velocity dr/dt. With these conditions it is safe to assume a similarity of flow for the two radial shock waves and for r(t)/R(t) where the shock waves are focused at r=0 when t=O. The function r(t) is of the form $r(t) = A(-t)^a$ with α the similarity index. The value of α, according to Landou and Lifshitz, for a $\gamma = 7/5$ is 0.7172. Now both functions are known and define a zone of extreme conditions in the TCB that are not in communication with the central contents. It is quite possible other concentric shock waves are produced within the TCB with the above being the two dominant ones.

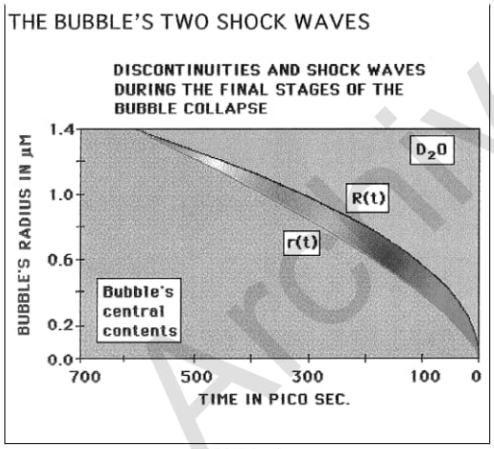

Figure 4

The bubble jet on the foil surface is a special case of the free bubble jet in the D_20 (Fig. 5).

Setting 0 time at the time R=0 the jet starts at the bubble surface at about 100 pico sec. Before r=0 or at R=0.6μm.

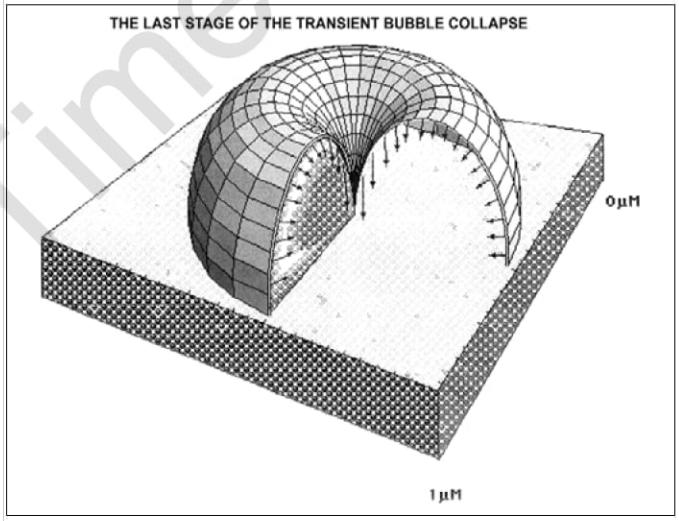

Figure 5

The jet and bubble content temperatures are represented by color going from cool blue to hot red.

The entire bubble contents are heated to about 40,000°c. At this point there is a shock wave initiated near the bubble interface breaking the communication link at the discontinuity of r(t) (the red blue interface). The blue

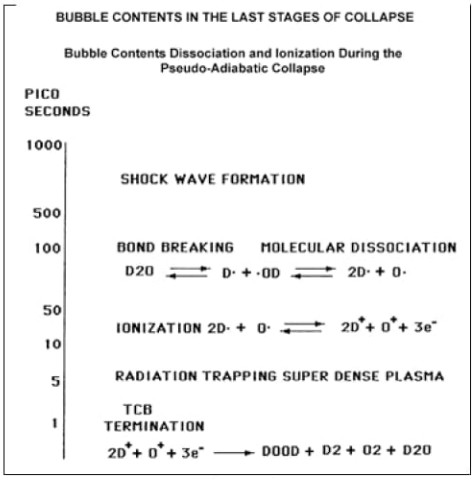

Figure 6

New Energy Times Archive

color of the central bubble contents (colors not shown) is the cooler part and the red color i s the hot zone between the two shock waves. These shock waves are accelerating to the bubble center with the jet moving several times faster.

Three factors of the collapse process (Fig. 6) that occur within the annular space (zone) which is defined by the two discontinuities near the bubble interface.

- the shock wave discontinuities both interior and exterior reflect normally emitted radiation.
- the D_20 is dissociated and ionized at high densities.
- there is a loss of mass from the bubble shell interface and a gain of mass from the central portion of the bubble.

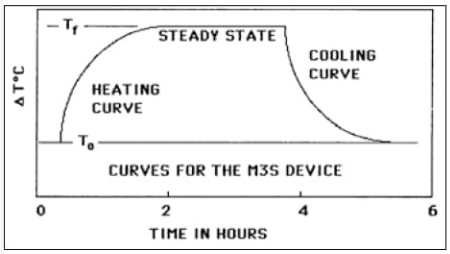

Figure 7

As the collapse process proceeds, the bubbles in their pseudoadiabatic collapse lose mass via the interface at a rate that still allows for the high temperatures, pressures and densities of a zone of bubble contents near the interface.

This mass loss causes coherence of the bubble's content population as the collapse process moves to its violent end. The contents of the bubble return to D_20 and a steadystate concentration of D_2, DOOD and 02.

THE M3C HEATING AND COOLING CURVES

The cooling curves are a convincing part of the Q(x) and Q(a) observations because they follow the same heating and cooling rates as the Joule heating for the mass of the M3S device. The Newton Law of Cooling applies to the heating or cooling from a steady state temperature component.

$$T-T_0=(T_f-T_0)(1-e^{-hAt/CM}) \text{ Heating Curve}$$

Where t is the time A is the surface area h is the coefficient of convection heat loss from the surface, M is the mass of the M3S, C is the heat capacity of the M3S, T is the tempeature of M3S at any time t, T_o is the starting steadystate temperature, and T_f isthe final steadystate temperature.

The heating and cooling curves are unique for the M3S device. There is about a 1.5 hour period of heating or cooling of the M3S device before reaching 95% of the steadystate temperature.

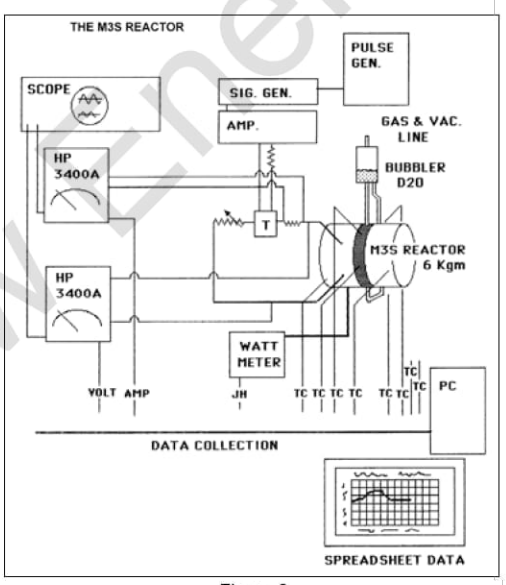

Figure 8

The mass of the M3S is about 6 kilograms and the heating of this mass 5 to 10 °C for hours produces a sizable amount of heat (easily in the mega Joule range). The D_20 volume in the reactor is about 15 ml and the grams of metal is about 2 grams. The chemical reactions cannot account for this amount of heat. Some Q(a) production was cut off after 24 hours.

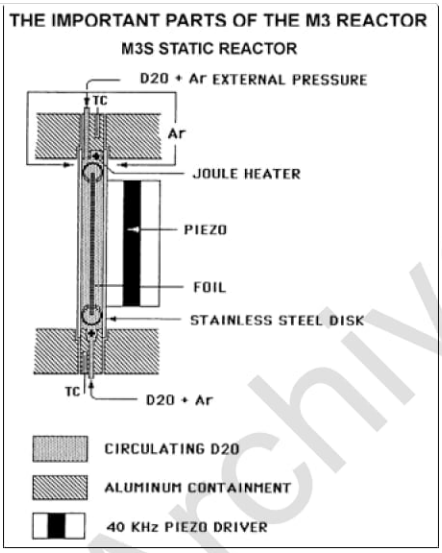

Figure 9

The schematic diagram of the calorimetric setup for the calibration and sonication runs (Fig. 8).

The M3S is a static device generating the data during 24 hours runs. This allows for long steadystate data acquisition times. The M3S operation is maintained at a constant Ar pressure and at constant acoustic and Joule heat inputs.

Air is passed through the Plexiglas containment box at constant velocity with a fan producing reproducible heat losses of less than + 0.5 watt.

The volume of D_20 in the reaction volume (Fig. 9) was 15 ml and was held static (no circulation). The foils were generally 100 μm thick and 5 cm square. The foils were held in place by a slotted teflon ring.

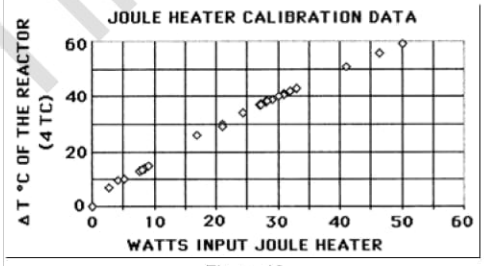

Figure 10

The 100 watt Joule heater was slightly recessed in the reaction volume. There were tube connections at top and bottom of the reactor to the bubbler. Four recessed wells for the tc which were averaged for the calorimetry measurements.

The one 40khz piezo drives the bonded 500 um stainless steel disk. The one piezo creates the transient cavitation bubbles in the D_20.

Argon gas is used to pressurize the D_20 and the back side of both stainless steel disks. This provides for an equal pressure across the stainless steel disks during the runs.

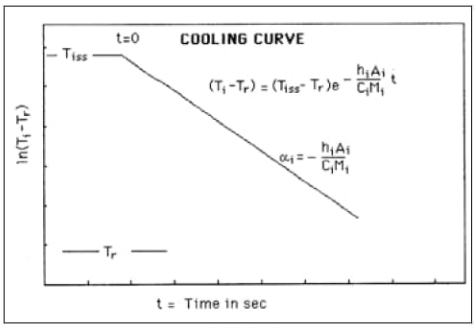

Figure 11

THE CALORIMETRY AND CALIBRATION OF THE M3S

The basis for the steady state temperature calorimetry is the use of the one hundred watt internal Joule heater that can correlate the Δ T and watts for the M3S (Fig. 10). The colorimetry

New Energy Times Archive

runs are interspersed with the sonication runs. The usual process is to run both at the same Δ T and watt input. Any points that fall to the left of the JH calibration line have Q(x) and Q(a). The standard deviation is on the order of 0.5 watts. It is clear that the JH is a very steady input from which to base measurements of the production of Q(x) and Q(a).

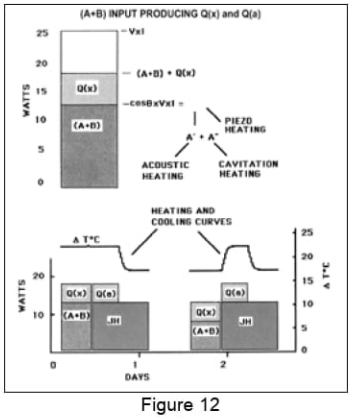

Figure 12

The low input of (A+B) in the range of 2 watts produces measurable Q(x) and Q(a) and inputs 40 watts produces Q(x) and Q(a) with a Δ T over 10 °C in Ag foils (Fig. 11).

The unexpected Δ temperature produced reflects the heating and cooling curves for the mass of the M3S device(Fig. 12). The same curves can be produced by the Joule heater. In the schematic above the ANOMALOUS HEAT sources, Q(x) and Q(a), are shown as yellow and yellow orange with the total watts being over 400 K Joules generated from the foil in the reactor. In the left figure the Joule heater in the reactor produces watts (red) equal to the (A+B) watt input (blue) and produces a Δ T step down. In the right figure the Joule heater in the reactor produces watts (red) equal to the (A+B) watt input (blue) and produces a Δ T lump.

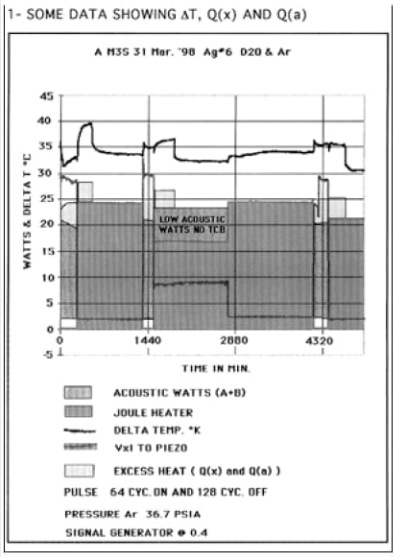

Figure 13

The data (Fig. 13) starts at the beginning of Run M3S31M. and shows the Δ T produced by Q(x) and Q(a). The run is pulsed with acoustic power (blue) and matched in power using a Joule heater (red). The acoustic power input is the volts x amps x cos(θ) = (A+B). After 1440 min. the acoustic power was reduced so the A″ = 0 in the (A′+A″+B) input. Therefore no TCBs were produced. Since no TCBs were produced there was no Q(x) or Q(a).

The data (Fig 14) is from the center of Run M3S31M. and shows the Δ T produced by Q(x) and Q(a). The run is pulsed with acoustic power (blue) and matched in power using a Joule heater (red). The acoustic power input is the volts x amps x cos(θ)=(A+B).

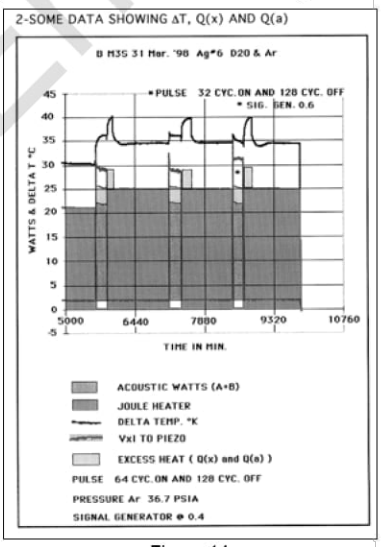

Figure 14

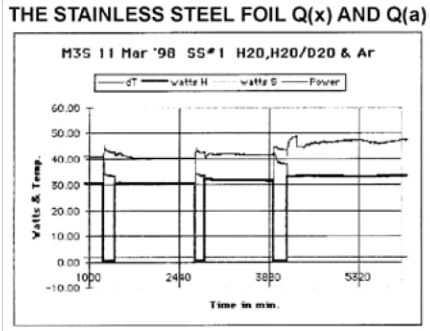

Figure 15

The SS data using tap water (Fig. 15) in the reactor with a 36 PSIA external pressure of Ar. Volume of 1/3 D20 was added to the tap water and the Q(a) appears. Also there is another unknown element of heat, that has been seen from time to time, starting at 4300 min. and may continue for several days.

The SS data 99.9% D20 in the reactor with a 36 PSIA external pressure of Ar. A small brief Q(a) production (Fig. 16).

The minimum pulses in the acoustic packet (Figs. 17, 18) is 1 and the amplitude for most runs is in the range of 2 atmospheres where 1 watt/cm2 is equal to 1.7 atmospheres. The length of time the sonicator is on compared to the total on plus off time is shown in the above graph. The acoustic packets may have any number of cycles.

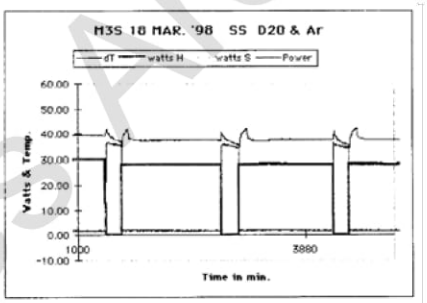

Figure 16

ACOUSTICALLY STIMULATED FOILS AND D+

The kinds or types of foils:

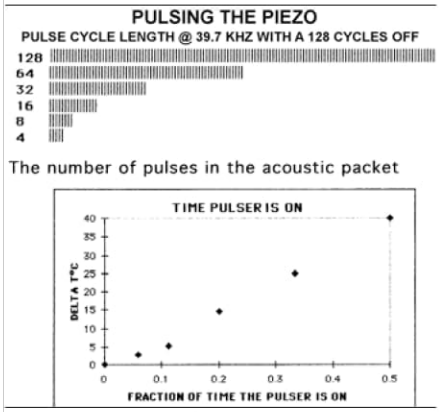

Figure 17

Size - thickness and surface area - 100 gm x 50 cm2

Copper, silver, titanium, nickel&titanium and stainless steel.

The durability of foils:

Silver < copper < titanium< nickel&titanium < stainless steel.

The pre-treatment of foils:

The annealed metals foils have increased grain size and experience increased type 2 cavitation damage.

The work hardened and thicker metals foils are much more du rable

The cavitation and the hydration of foils:

The mobile D+ hydrides like palladium

The non hydrating metals like silver

The immobile hydrides like titanium

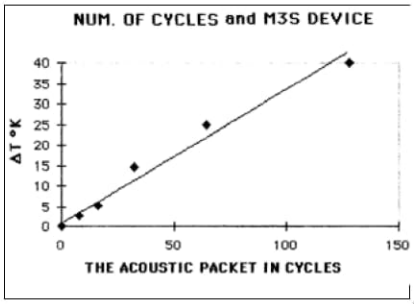

Figure 18

New Energy Times Archive

Acoustic absorption and reflection:

The input acoustic energy into the metal lattice is dependent on the thickness, hardness and type.

The standing acous-tic wave:

The foil absorbed acoustic energy can be found in surface and bulk waves but is most easily observed as a standing resonant wave dictated by the characteristic of the foil.

Cavitation damage:

Type 1 is the chipping away at the grain boundaries.

Type 2 is the melting and vaporization of the lattice.

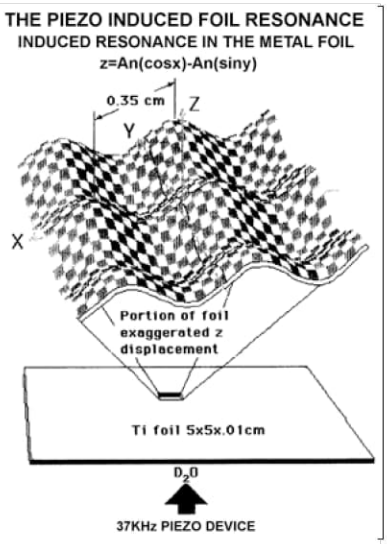

Figure 19

Mobility of D in lattice:

The formation of mobile hydrides or transient hydrides via cavitation must take into account the very high temperatures at the spot of D^+ entry into the lattice which will enter with increased mobility.

The hydrides that are not mobile except at high temperature such as titanium will form higher hydrides that no longer adhere to the lattice and will slough off.

Bubble induced hot spots in and on the foil:

The collapsing bubble jet accelerates D^+ into the metal lattice whether there is an affinity of D^+ with the lattice or not.

Foil events:

All interactions of the foil injected bubble contents are on the order of a few pico seconds and of high pressure and temperature in nature.

The foil absorbs some of the acoustic input "A" and being thin the reflection component is small. The foil absorption is in the form of surface waves and bulk waves. The resonant waves in the foil are perpendicular to those passing through the D_20 (Fig. 19).

The standing wave pattern on the foil is spread over 75% plus of its surface area. The pattern left on the foils are multiples of the foil shape (round, square and rectangle foils have 20 or more cells across the foil that mimic the foil shape).

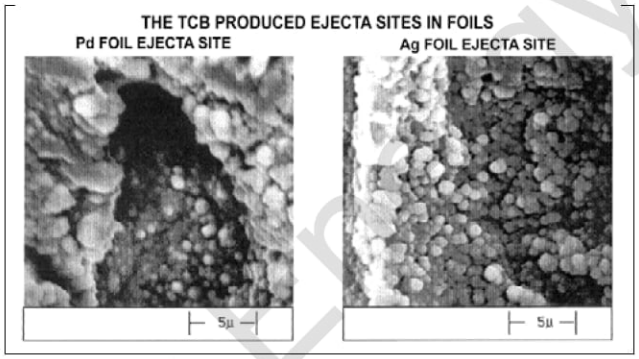

Figure 20

A Pd 100µM thick foil in D_2O, when subjected in an acoustic field of 2 watts/cm2 in a M2 device, and a Ag 127pM thick foil, when subjected to .2 watts/ cm^2 in a M3C device, are shown in SEM photos (Fig. 20) to have similiar ejecta sites. The TCB exposure times were the same.

Note that the both the Ag and the Pd foils deposit one M resolidified metallic spheres as the ejecta leaves the ejecta site. The hydrides that are formed are transient in the case of the Ag but are more stable in the case of Pd. This indicates a difference in hydride formation with the SEM photos indicating a similarity in ejecta sites

Calculations generated from the two SEM photos above from simple calculations demonstrate the heat evolved from the ejecta sites are in excess of known chemical reactions. These unknown reactions account for the heat pulses that eject vaporous atoms from within the foil.

Heat flow, diffusion, permeability, mass acceleration of ejecta, loss of deuterons, and pressure buildup along with the ejecta period at the ejecta site are some of the factors to consider when making the energy calculations.

SUMMARY - What Has Been Learned the Last Two Years

CAVITATION SYSTEMS ARE VERY REPRODUCIBLE

FOILS

- Most foils are active producing Q(x) and Q(a).
- The traditional formation of a metal hydride is not necessary.
- The metallic lattice type may not be important nor the isotopic magnetic spin.
- The purity of the metal is not important.
- The acoustic input imposes the foil's resonant frequency in the lattice. It depends on the foil's physical characteristics.
- Transmutations—- probably
- Ejecta sites not unique to Pd and are not a major part of the excess energy production.
- Q(x) and Q(a) can be produced without visible damage to the foil.

ACOUSTICS

- Piezos
  - Single
  - Opposed
  - Transmitter and receiver
- Pulsed and continuous wave
  - Must meet threshold intensity
  - Must not overpower the cavitating liquid
- Controlling parameters
  - External pressure
  - Temperature
  - Acoustic input

CAVITATING LIQUID

- D_20
  - Excess heat from most metal foils
- D_20 and H_20
  - Probably excess heat from most metal foils
- H_20
  - Reduced Q(a) from some metal foils such as Ag reduced to 1/3 the D_20 value
  - No measurable excess heat from SS

Aspden Patent continued from page 31

in atomic tables, excluding what occurs in the heavy nuclei ranging from bismuth onwards, require emissions of beta particles. Beta particles are those electrons and positrons already mentioned. They are emitted by atomic nuclei. Yet atomic physicists have chosen to ignore their existence in atomic nuclei and have instead assumed that there are neutrons present to keep the mass balance. Here lies the very heart of the problem surrounding cold fusion. Neutrons are unstable. They are artifacts created when atoms break up. They are composites of beta particles and protons, but they do not exist as 'neutrons' in that atomic nucleus.

Accordingly, one must see the evidence of 'cold fusion' as evidence confirming this rather obvious proposition, namely that there are no neutrons in atomic nuclei. This is a case where discovery in the context of a technological advance, meaning 'invention', has given a new insight into basic physics and yet has led to the incredible contest by which the absence of the neutron hot fusion product has been regarded as disproving what is observed.

However, summarizing the position, Nature is constantly attempting to create protons everywhere, but generally does not succeed because there is no energy to sustain the field equilibrium and so the pseudo-creations promptly decay. However, given the right conditions the statistical action can, even with the field equilibrium requirement, result in nuclear fusion because if the trigger threshold is reached it becomes energetically favorable for a proton elsewhere but nearby, to decay to keep the vacuum field energy balance.

No doubt the reader will understand that, if a proton were to be created within an atomic nucleus, the event, if also accompanied with the expulsion of a positive beta particle, would leave that nucleus one nucleon heavier but with its charge unchanged. If accompanying this event, a proton nearby, or a proton in a nearby deuteron, were to decay with its beta particle action, then some heat energy would be shed nearby. This becomes a very likely event, given that Nature most certainly does have a way of creating matter in proton form, provided (a) the overall mass energy of particles involved allows the reaction and (b) the close proximity of the particles is assured.

Aspden Patent continued on page 46

New Energy Times Archive

DEFENDERS OF THE FAITHS

Editorial by Stanley Schmidt, Editor *Analog* *(From Analog, March 1998)*

Reprinted with permission of the author and the author's agents,
Scovil Chichak Galen Literary Agency, Inc.

As befits its name, *Analog Science Fiction and Fact* publishes, in a typical issue, at least one article of 'science fact." But what does "science fact" mean?

In the strictest possible sense, and the one which some readers would clearly like us to use, it can be interpreted as "an unquestioned and unquestionably true statement about the nature of the universe." Unfortunately, there is little, if anything, that we actually know with that degree of certainty. Even if there were, many other readers (and I) would not want *Analog* to define the subject matter of its fact articles so narrowly.

In general, we're not interested in reviews of material so well established that it can be found in textbooks. Such stuff you might as well get *from* textbooks. As a magazine whose main focus is what the future might be like and how we can make it better, we are more interested in subjects on the frontiers of research. With only a dozen fact articles per year, we want to concentrate on things which readers are not likely to have read much about elsewhere and which seem likely to have far-reaching implications for the future.

That, of course, covers a broad range. Some of our articles are descriptions of new technologies or areas of scientific inquiry which are generally recognized as major developments within their fields. Some are about the processes of inquiry and innovation *per se*, or about their legal or social ramifications. And some are about "fringe" work: experiments or theories that would have considerable impact if substantiated, but are currently controversial, sometimes even to the point of being rejected and sneered at by most workers in their fields.

Those bring us lots of letters. Many of those letters fall into one of two extreme camps, both of which miss the point of what the authors and the magazine are trying to do with such articles. So an occasional reminder may be in order. Just what is the point of such articles as Jeffery D. Kooistra's "Paradigm Shifty Things" (June 1997) and Dr. Eugene F. Mallove's "Cold Fusion: The 'Miracle' Is No Mistake" (July/August 1997)? Why do we publish them? What purpose do they serve?

To refresh your memory, or in case you missed them, Kooistra's article surveyed heretical work in fields (no pun intended) as diverse as gravitation, electromagnetism, and Egyptology. Mallove's concentrated on the specific area commonly (though perhaps not accurately) known as "cold fusion." Both cited references that readers could use to go back to the original work and evaluate it for themselves. Virtually all of those references were by people with the kind of credentials commonly accepted as strong evidence of professional competence, and in Mallove's case there were *dozens* of them.

Yet the mail followed the usual, predictable pattern (and precious little of it showed any evidence that the writers had even looked at the sources cited).

One group wrote to applaud the author for exposing how narrowminded "The Scientific Establishment" is, or even for proving TSE "wrong." Members of this group often compare TSE to a religious priesthood, and sneer at "orthodox" scientists as "defenders of the faith."

The other "extreme" group, of course, is a subset of those "defenders of the faith" who actually do attack the "heretics" in a largely reflexive way, pointing out that generally accepted theories got that way through a long, hard process of repeatable experiments and peer review—and then dismissing out of hand the possibility that somebody might have found something not adequately covered by those theories. Such correspondents sometimes go on to attack Analog for being "antiscientific" for daring to publish such hogwash—a view I find ironically amusing since I am myself a scientist. (I left that line of work only because editing *Analog* sounded like too much fun to pass up; I have never ruled out the possibility of someday returning to it, and the advancement of scientific understanding has always remained one of my primary concerns.)

Both groups act like defenders of different faiths: in one case the faith that science already understands things so well that uncomfortable data must be wrong and can safely be ignored; in the other, the faith that science is "just another priesthood" and someday the downtrodden underdogs of independent research will prove the scientific priests wrong.

In fact, *both* groups are wrong in important ways. Both could use reminders of important facts about how science actually develops—and how they can best contribute to that development.

Science is not "just another priesthood," or just a matter of faith. It rests on a foundation of accumulated data and critical analysis, and generally accepted scientific theories usually do have a lot of validity in that they describe the data to date more completely and accurately than other theories that have been proposed. The authors of most of our "heretical" articles understand that (those of the two articles I used as examples are scientists themselves), and critics who attack them by pointing it out are simply poking at straw men and undermining their own credibility. Our authors seldom, if ever, deny that science works that way, or claim to prove that established theories are "all wrong."

They do, however, remind us that new observations sometimes turn up that are not adequately explained or predicted by the currently accepted theories, and that the theories must be revised, expanded, or replaced to account for them. That, too, is an important part of how science advances. An old theory seldom has to be scrapped entirely; if it was solidly based on one range of experience, the new theory must give the same experience where the old theory worked. Newtonian physics, for example, remains a useful model for slow-moving, macroscopic objects, even though those cases are equally well (but less conveniently) described by relativity and quantum mechanics. But observations on very small and/or fast-moving objects *require* the additional subtleties of relativity and quantum mechanics, and those theories are based on a radically different worldview than Newtonian mechanics. People who forget that new data sometimes require new theories are just as wrong as those who forget that science is based on evidence, not blind faith.

The more perceptive of those who write to attack our "heretics" sometimes point out that, with the sheer volume of information being generated these days, few scientists can afford to spend much time looking closely at work which appears unlikely to withstand scrutiny. This is quite true, and a real problem; yet you can't really be *sure* what will withstand scrutiny unless and until you scrutinize it. I addressed this dilemma years ago, in an editorial called "Advice for 'Crack-

New Energy Times Archive

pots'" (*Analog*, October 1980), wherein I explained the situation from a professional scientist's viewpoint and made concrete suggestions as to how a proponent of an unorthodox but meritorious view might enhance his or her chances of getting a serious reading.

On the other hand, the fact remains that science is done by human beings, and for some of them the dismissal of the unorthodox as "not worth my time" has become so automatic that it's practically impossible to get them to seriously consider any unorthodox work. This, too, is understandable; if you've seen enough letters from people who claim they've disproved relativity, but who soon make it painfully clear that they don't even understand what relativity *says*, it becomes harder and harder to approach yet another such letter with an open mind. Yet it will occasionally be crucial to the advancement of science to do exactly that. Obviously *everybody* can't listen attentively and mull over *every* unorthodox suggestion. But the whole point of scientific publication is to get new data and ideas out so that, somewhere among the many potential readers, they may find a few who latch onto them and check them out.

Several people who wrote about our latest "heretical" articles objected to what they saw as stridency of tone (which can indeed be counterproductive), and reminded us that if an odd new observation is real enough, it will eventually assert itself so insistently that it can no longer be ignored and theories will *have* to revised to accommodate it. *But that can't happen* if a particular kind of new observation is systematically blacklisted so that it *isn't* repeatedly called to the appropriate people's attention. That *can* happen, and there is at least some evidence, that it has happened in the case of "cold fusion."

According (for example) to Edmund Storm's article in the May/June 1994 *Technology Review* (on which I commented in my January 1995 editorial), the US Patent Office has categorically stopped issuing patents in that area, the Department of Energy has stopped funding research in it, and "conventional" journals refuse even to consider papers in it. Work in it continues, at what seems to be a large number of quite respectable labs, but has to be published in a very few special journals that are largely regarded as a "ghetto" and not taken seriously by those not in that ghetto. It may be that, if the effects they're studying are real, they'll eventually be heard even outside; but there is also a danger that the ghetto will be so effectively fenced off that a potentially revolutionary field will never have a chance to grow up.

That is why *Analog* occasionally publishes articles about such things. We are, at heart, a speculative magazine, and our readers include many scientists and engineers—some of them considerably above average in their openness to considering "heresies." Yes, it is important for us to tell you about some of the most important new work that is generally accepted. But we consider it just as important to tell you about some of the work that's having trouble getting heard in conventional professional journals, but looks as if it just might pan out and prove important. Much of it won't of course, but some of it may. And someone who saw it here just may play a key role in making that happen.

Aspden patent continued from page 44

What, then, are the right conditions and how can this action be enhanced?

The answer is found by analogy with the hot fusion situation. We need to bring into very close relationship the two nuclei that are to fuse together. We can do this either by moving them at high speed, as by thermal excitation, or somehow assuring that, since they are positively charged. the field background has a negative electrical condition. The nuclei must further be stripped away from the satellite atomic electrons of the normal atomic form.

Now, before explaining how physics can assure this in the cold fusion work.

Aspden continued from previous column

it is appropriate to digress a little, in two ways.

Firstly, reference will be made to some reported evidence of cold fusion that antedates the Fleischmann-Pons activity. Secondly, the author will refer to his own experimental diversion at the time he made the invention which is the subject of the parent patent application based on the GB priority date of Apr. 15, 1989.

Cold Fusion in 1960

At pages 2-3 of the *Journal of the British-American Scientific Research Association*, Vol. XIIL No. 4, December 1990, there is an article by Edward Rietman entitled 'MOLECULAR CYCLOTRONS'. The article makes no reference to the 'cold fusion' theme but is concerned with transmutations at normal laboratory temperatures.

The following are quotations from that article:

'Digging through some old notes I found results for experiments on molecular cyclotrons. C. L. Kervran in 1960 published a book entitled TRANSMUTATIONS BIOLOGIQUES. His results were 'verified' by H. Komaki of Japan. In 1965 Kervran was nominated for the Nobel Prize.

These two workers observed an increase in metallic elements in seedlings germinating in pure water. Specifically they observed transmutations of the type: Na → Mg, K →Ca, Mn → Fe.

In each of these cases a proton was reported to be absorbed by the nuclide of lower atomic number to form the next higher element.

S. Goldfine wrote a report in 1978 discussing how such reactions might take place in biological organisms.

It is well known that ATP in the mitochondria is a key molecular component in biochemical energy production. The mitochondria also contains Na. Mg, K Ca. Mn and Fe ions. Goldfine suggested that the periodic field of an Mg-ATP crystal lattice will cause periodic fluctuations on the wave function of the trapped electron . . . there is a flow of electrons in the Mg-ATP caused by the many reactions occurring in the mitochondria . . . Goldfine continued to suggest that the small crystallites of Mg-ATP in the mitochondria act as molecular cyclotrons to accelerate protons and produce reactions of the type:

Na+H→ Mg, K+H →Ca, Mn+H→ Fe

To cast some light on this subject I spent months attempting to grow crystals of Mg-ATP complex for study in X-ray diffraction. I never succeeded in even obtaining a powdered sample. I concluded that the Mg-ATP complex exists only in an aqueous environment . . .'

From the above quotation one can see that here was a version of cold fusion presented from a background that is in the field of biological organisms.

One may further infer that living organisms are subject to nuclear transmutations that are accentuated where crystallites involve metallic elements in an aqueous environment, and this suggests that, in denying the realities of cold fusion. one is turning away from something that may have relevance to cancer research, inasmuch as those transmutations might well have consequences to health.

Bearing in mind that there is evidence to show that magnetic fields also have an effect on biological activity that is problematic from the physics viewpoint. it is appropriate to investigate the electrodynamics of heavy ions, whether moving in water. in metal or in a plasma. The point of vital importance that warrants attention is that all the teaching concerning electrodynamic actions is based on empirical studies involving electron currents. Electrons are classified as leptons and there are some very sound reasons for distinguishing their electrodynamic properties from those of hadtonic matter.

The Applicant's Electrodynamic Research

There are long-accepted but unresolved anomalies concerning the anomalously very high forces exerted on heavy ions in a cold cathode discharge. In researching this subject the Applicant has established that the forces exerted on a heavy ion owing to its electrodynamic interaction with an electron are in theory, enhanced by a factor equal to the ion-electron mass ratio.

This theory leads to a breach of the law that specifies balance of action and reaction, which means that energy is being being exchanged with the field medium in which the electromagnetic reference frame is seated. The effective electromagnetic reference frame has a structure, as if it is formed by a fluid crystal lattice which, on a local scale, can adapt or maybe govern the shell structure of an atomic nucleus. Thus, normally, the motion of atoms and even ions in a gas or a solution will not evidence the anomalous electrodynamic effects, simply because they do not move relative to the local electromagnetic reference frame, meaning that, as far as concerns translational motion. the electrons present are the only active participant electrodynamically.

It is, however quite a different situation when we consider a proton or a deuteron as a free ion inside the crystal host lattice of a metallic form, because there can only be one electromagnetic reference frame effective at any location in that metal. Therefore, a proton that is within a host crystal, and is free to move through it, will be seen as moving relative to the electromagnetic reference frame and then it can contribute to anomalous electrodynamic effects.

These conditions were the subject of the Applicant's research as a Visiting Senior Research Fellow at the University of Southampton in England 1983 onwards. The Applicant had written on the subject of the proton. the deuteron and the neutron, pursuing the theme that no neutrons exist inside the deuteron and stressing that atomic nuclei are composites of beta particles

Aspden patent continues on page 51

New Energy Times Archive

An Open Letter to President Clinton

Stephen Kaplan
3635 SW 87th , #12
Portland, OR 97225
503-297-2424
kap808@europa.com

May 4, 1998

President Bill Clinton
The White House
Washington, D.C.

Dear President Clinton:

You have expressed great concern about global warming and the long-term impact of the burning of fossil fuels on the environment. A growing body of evidence indicates that low-energy nuclear processes could become a source of abundant, non-polluting energy. Yet you are not receiving accurate advice about this possibility from your energy advisors. In particular, I am referring to the Department of Energy and at least one of the scientists on your energy advisory panel.

Let me begin by saying that the Department of Energy is providing erroneous information to public officials about research on low-temperature nuclear reaction processes (popularly but perhaps misleadingly known as "cold fusion"). In a recent letter to Congresswoman Elizabeth Furse, the Department claims that the reports of "anomalous excess energy" and "anomalous nuclear effects" in cold fusion experiments have not been verified and that there is "no scientific evidence . . . that would suggest transmutation of radioactive materials can be achieved through low-temperature nuclear processes."

This position reflects the stand the Department took in 1989 when one of its panels recommended that no government funding should be provided for research in this field. When that judgment was made, not all the evidence was in. Now that many years have passed, during which substantial research has been done in this field worldwide, it is clear that the Department's conclusion was seriously inaccurate even in 1989, and it is even more so today.

There is a growing body of experimental evidence that indicates anomalous excess heat and transformation of elements are regular occurrences in cold fusion experiments. This was confirmed

at the 7th International Conference on Cold Fusion (ICCF-7) that was held in Vancouver, B.C., April 19-24, 1998. At that conference, Dr. Les Case shared his path-breaking research on a cold fusion cell that appears to dependably produce excess energy. Subsequent tests of that process by scientists at Cold Fusion Technology, Inc. verify his claims.

Not only has there been tremendous progress in basic research, but several companies in the United States are working hard to bring to market commercial units (see enclosed list). Moreover, there is also evidence that indicates that low-energy nuclear processes can transmute radioactive elements into non-radioactive substances. Two companies — CETI and the Cincinnati Group — have sold demonstration transmutation devices to other scientists. The CETI power cell was highlighted or ABC's *Good Morning America* and *Nightline*. Moreover, the transmutation of radioactive elements by both of these devices has been independently confirmed by other laboratories.

You have another energy advisor who is misinformed about the status of cold fusion research. I am referring to Dr. Murray Gell-Mann, a distinguished scientist who won the Nobel Prize for Physics in 1969 for his discovery of the quark, a subatomic particle. He is a brilliant man, but like so many in the scientific establishment, he has a real blind spot concerning the subject of cold fusion.

Recently, Dr. Gell-Mann gave a lecture at Portland State University in Portland, Oregon. At the end of that lecture, someone asked him about his views concerning cold fusion. His reply: "It's a bunch of baloney. Cold fusion is theoretically impossible, and there are no experimental findings that indicate it exists."

In response, Dr. John Dash, a metallurgist who is a member of the Portland State University physics faculty, announced that he had been engaged in cold fusion research since 1989 and had found much empirical evidence that the phenomenon is real. Dr Gell-Mann expressed no interest in learning about Dr. Dash's research findings.

After his talk, I met with Dr. Gell-Mann and asked him to consider the evidence for the reality of low energy nuclear reactions with a more open mind, and I left with him the enclosed list of studies in the field. A week later I sent him a letter inviting him to take a look at additional evidence, starting with information that could be provided by Dr. John Dash and also by Dr. Tom Claytor of the Los Alamos National Laboratory.

Since Dr. Gell-Mann declined to answer my letter (and a follow up letter) and did not consult with either Dr. Dash or Dr. Claytor, perhaps he is uninterested in considering new evidence concerning the reality of cold fusion.

Is this the kind of scientist you want to advise you on energy matters? At the very least, you might want to balance his judgement by those provided by more open-minded scientists. Only in this way will you be assured you are getting good guidance on a matter of critical importance to our energy future.

You may want to consult several scientists who have been involved in the field while working for the government: (1) Dr. Tom Claytor of the Los Alamos National Laboratory, whose experiments indicate that tritium can be produced by low-energy nuclear reaction processes; (2) Dr. Mel Miles, a scientist on the staff of the Navy's China Lake facility, who has also found transmutation of elements in his research; (3) Dr. David Nagel, head of the Condensed Matter and Radiation Sciences Division of the Naval Research Laboratory, who prepared the enclosed judicious appraisal of the status of cold fusion research; (4) the scientists at the U.S Army who decided to fund Dr. John Dash's research on cold fusion at Portland State University (Portland, Oregon); (4) Dr. Edmund Storms, formerly with Los Alamos National Laboratory, who published the excellent enclosed discussion of the cold fusion controversy.

Although this evidence is being ignored by your scientific advisors, it has not escaped the attention of scientists advising foreign governments. For example, among the scientists in attendance at

New Energy Times Archive

the latest International Conference on Cold Fusion were colleagues of George Lonchampt, a member of the French Atomic Energy Commission. At an earlier international conference, he reported he had successfully replicated the original cold fusion experiment of Drs. Martin Fleischmann and Stanley Pons. At his urging, the French Atomic Energy Commission is now funding cold fusion research.

Also in attendance at ICCF-7 were prominent scientists from Japan, China, Russia, Italy, Germany and other countries. Among the Chinese scientists were representatives from the high level Institute of Modern Physics of the Chinese Academy of Sciences.

Many years ago, the U.S. government ignored the scientific claims of Robert Goddard, the inventor of the liquid-fueled rocket. Germany did not ignore his research, with devastating and almost disastrous results for the world. Will a mistake like that be repeated today?

Unless you reach out widely and get scientific advice from a wide variety of advisors, you will not be able to develop a rational energy policy for the future. If your official advisors are so wrong regarding cold fusion research, what other information vital to national security and well-being might they be keeping from you? May I respectively suggest that this question deserves high priority attention.

Sincerely,
Stephen Kaplan

ATTACHMENT LETTERS

February 20, 1998

Dr. Murray Gell-Mann
1399 Hyde Park Road
Santa Fe, NM 87501-8943

Dr. Gell-Mann:

I am one of the people you accused of being a member of a "baloney network" in your recent speech at Portland State University in which you ridiculed the entire cold fusion phenomenon as being theoretically impossible and without empirical foundation. After your talk, I asked you to be open to new information concerning current research in the field. Coming from over 200 laboratories all over the world, this research is consistently coming up with findings of anomalous energy output and transmutation of elements. Something real is happening, even though there is no theoretical consensus concerning the why of what is occurring.

In the hope that you will give this matter another look, I am enclosing several documents that discuss past and current research on low energy nuclear reactions, including work being done to bring technology based on that research to the marketplace. They are: (1) A memo prepared for the League of Women Voters by Dr. Eugene Mallove, editor of *Infinite Energy* magazine, concerning research on low energy nuclear reactions and its relationship to nuclear waste remediation, the appendix to which contains numerous references to cold fusion research being conducted in laboratories all over the world; (2) Another memo prepared for the League on the same topic by Hal Fox, editor of *New Energy News* and the peer-reviewed *Journal of New Energy*; (3) A prospectus for a newly created New Energy Partners Fund, which provides an excellent overview of the history and current status of cold fusion research; and; (4) An article on cold fusion research being done by Tom Claytor and his colleagues at Los Alamos National Laboratory (after reviewing this article you may want to arrange to visit Tom's laboratory since it is so close to where you live).

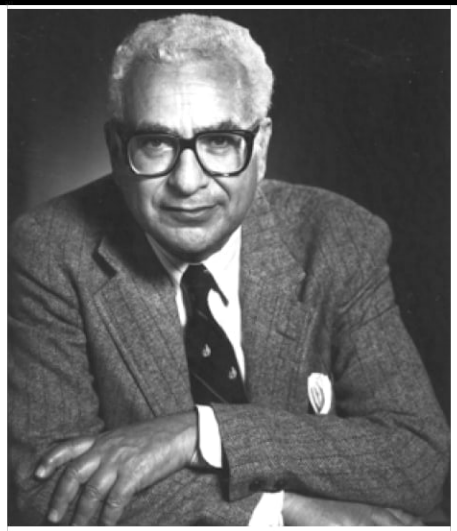

Dr. Murray Gell-Mann
Photo courtesy Karsh/Caltech

You are invited to visit Dr. John Dash's laboratory at Portland State University, where he is conducting pioneering cold fusion research with support from the U.S. Army. Dr. Dash was the other member of the PSU audience you accused of being a member of a "baloney network". It is interesting that the U.S. Army is suspending judgment about whether he should be so designated.

You are in a very influential position with regard to the nation's energy future, since you serve as an advisor to the President. It would be a shame if you failed to give the President a truly unbiased look at this controversial area of research. I ask you to act as the Nobel Prize-winning scientist you are and look again at the evidence, instead of assuming *a priori* that it cannot exist. Once you have truly considered the new evidence I am bringing to your attention, please communicate to me your mature reflections on this controversial matter.

Thank you for your attention.

Sincerely,
Stephen Kaplan

P.S. I am also enclosing some information about my background and an article I wrote for *Infinite Energy* magazine about the Catalyst Institute, a new non-profit seeking to further the work of scientists working on the frontiers of science.

Second letter to Gell-Mann:

March 19, 1998

Dear Dr. Gell-Mann:

On February 20, 1998, I sent you the enclosed letter hoping to initiate an honest discussion regarding the reality of cold fusion findings. I realize you have a very busy schedule and perhaps this letter does not have a high priority for you. However, given the importance of the topic and your influence in energy policy-making, I believe it deserves your consideration.

I am assuming, of course, that you are an open-minded scientist. In fact, you are on record at your recent lecture at Portland State University as saying you would examine the evidence in this controversial field.

Please let me know your most mature conclusions after taking a look the growing body of experimental findings in the field. Once again, I want to extend an invitation to visit Dr. John Dash's laboratory here in Portland. If that is not possible, perhaps you would be interested in corresponding with him. Also, Dr. Tom Claytor of the Los Alamos National Laboratory would I'm sure be delighted to discuss his pioneering research with you. Or perhaps you would like to talk with Dr. Melvin Miles of the U.S. Navy's China Lake research facility.

Thank you for your attention to this concern.

Sincerely,
Stephen Kaplan

Intellectually Abusive Letter from the DOE:

Department of Energy
Washington, DC 20585

April 2, 1998

The Honorable Elizabeth Furse
Member, U.S. House of Representatives
2701 N.W. Vaughn, #880
Portland, Oregon 87210-5351

Dear Congresswoman Furse:

I have been asked to respond to the February 20, 1998 letter you wrote to Secretary Pena on behalf of your constituent, Mr. Stephen Kaplan. Mr. Kaplan reported to you on recent claims that nuclear waste can be transmuted into inert substances through low-temperature nuclear reactions, alleviating the need for encapsulation and long-term storage. In your letter, you asked whether the Department of Energy has been aware of or has studied these methods.

To the best of my knowledge, these methods evolved from attempts to demonstrate "cold fusion," which was first reported in March 1989. Following that dramatic announcement, researchers throughout the world, including

New Energy Times Archive

those at the Department of Energy's national laboratories, raced to verify the claims and to understand the underlying phenomena. After an exhaustive search, the reports of "anomalous excess energy" and "anomalous nuclear effects" were not verified. However, a body of data and information resulted, appearing in scientific journals as well as the technical and the general press. Several books were even published on the subject. The book, "Cold Fusion: The Scientific Fiasco of the Century," by Professor John R. Huizenga provides a detailed account by a scientist who was fully immersed in the study of "cold fusion."

I realize that some may hold the view that unusual and untested processes will come along and become important elements in developing long-term, safe solutions for the disposal of nuclear waste. Certainly, researchers are motivated to further knowledge and understanding by venturing into new areas. The enthusiasm that accompanies these explorations must be tempered with the proper application of basic scientific principles. However, no scientific evidence has been presented to date that would suggest transmutation of radioactive materials can be achieved through low-temperature nuclear processes. Although no case has been made to warrant a research program to investigate these processes, the Department maintains a capability through research grants, top explore the limits of science as they relate to our mission. Information on the Department of Energy's Special Research Grant Program can be found on the internet at:

http://www.er.doe.gov/production/grants/grants.html

Thank you for bringing Mr. Kaplan's thoughts to our attention. Your interest in assuring that our country develops long-term, safe solutions for handling nuclear waste is sincerely appreciated. If you have any further questions or comments, please feel free to contact Mr. Fred Tathwell, Office of Congressional and Intergovernment Affairs, on 202-586-6447.

Sincerely,
David B. Nelson
Associate Director of Energy Research for the Office of Computational and Technology Research

Steve Kaplan replies to DOE's Nonsense:

May 8, 1998

Representative Elizabeth Furse
Oregon Office
2701 NW Vaughan
Portland, OR 97210

Dear Elizabeth:

I am appalled at the ignorance displayed in the letter from the Department of Energy's spokesman, David B. Nelson, in his letter to you of April 2, 1998. It demonstrates that the Department of Energy, which prematurely reached the conclusion that cold fusion lacked credibility in 1989, now is completely failing to comprehend the true record of research in the field.

The evidence for excess heat and nuclear reactions at low energy is overwhelmingly established by numerous published peer-reviewed and non-peer reviewed papers and reports (see enclosed article by Dr. Edgar Storms). Moreover, this research is now the basis for major efforts by several new energy companies to develop the technology to the stage where it can be sold to the public. Clean Energy Technologies, Inc. of Sarasota Florida (CETI), BlackLight Power, Inc. of Malvern, Pennsylvania, and ENECO of Salt Lake City-- to name the more well-known efforts -- are developing commercial heating and electricity generating devices.. The Cincinnati Group in Ohio has recently announced for sale a commercial demonstration device that transmutes radioactive thorium into benign nuclides in less than an hour. CETI, whose cold fusion heating devices have been profiled several times on ABC's *Good Morning America* and *Nightline*, also has a radioactivity reducing processes for which a United States Patent has been allowed.

Other evidence of the validity of the research is available. Several major utility companies, including PacifiCorp of Oregon, have established investment positions within some of the emerging companies. A cold fusion New Energy Technologies investment fund, directed from Greenwich Venture Partners of Greenwich, Connecticut has just been launched (see *Infinite Energy*, Vol.3, Issue #13/14.). Several foreign nations, including Japan, France, Italy, Germany, Russia and China, have strong cold fusion research programs. In France, for example, this research is being funded by the French Atomic Energy Commission.

Given all this activity, it is not surprising that Gerald Celente, one the world's most reknown and accurate economic forecasters, proclaimed in his new book, *Trends 2000*, that cold fusion and zero point energy research is one of the top ten trends to watch in 1998 and beyond the year 2000 (see *USA Today*, December 11, 1997). Does this sound like a field that is dead and buried, as the Department of Energy would have you believe?

Enough is enough. When is the Congress and the President going to start questioning seriously the kind of faulty advice they are being given by the Department of Energy?

I raised this question in the enclosed letter to President Clinton, a copy of which is being sent to David Nelson of the DOE.

I realize that you will not be returning to Congress when your current term of office expires. I regret this decision deeply, even though I understand why you came to it.

Perhaps as one of your last major initiatives you could help launch a comprehensive review of the nation's nuclear waste policies (since this is within your committee jurisdiction), one aspect of which would deal with the DOE's stance toward research on low-energy nuclear processes. I know you would get support for this position from other members of Congress and public interest groups such as Public Citizen, Physicians for Social Responsibility, Hanford Watch and others. Please let me know if you are willing to use your influence to achieve this goal.

Thank you for efforts to develop sane policies regarding nuclear waste and other energy concerns.

Sincerely,
Stephen Kaplan

(It would be helpful if other civic-minded people emulated the work of Steve Kaplan. Light a fire— carry the torch of truth! —Gene Mallove)

APS Meeting Allows Cold Fusion to Come in from the Cold!

Three oral presentations on cold fusion were made on (March 19, 1998 Thursday) before the Annual American Physical Society meeting held in Los Angeles,

Dr. Tom Passel, Dr. Scott Chubb, Dr. Talbot Chubb, and Russ George at APS Meeting in Los Angeles, March 1998 *(Photo: Akira Kawasaki)*

March 16 - 20, 1998.

For the first time since 1989, the APS allotted time at its meeting for presentations of matters concerning Cold Fusion. So, there may be some hope for that wayward organization.

The individuals making presentations were:

Russ George of E-Quest Technology 11:12 AM U26 2 "Experimental Evidence of Radiationless Aneutronic Nuclear Fusion in Metal Deuterides Supported by EPRI and SRI international." This deals with the sonofusion effect and results.

Dr. Talbot Chubb, Dr. Scott Chub of Oakton International Corporation 11:24 AM U26 3 Deuteride-Induced Strong

New Energy Times Archive

Force Reaction." Concerning the theory of CF reactions in Arata's double structured palladium cathode.

Dr. Scott Chubb, Dr. Talbot Chub of Oakton International Corporation 11:36 AM U26 4 "Theoretical Framework for radiationless Aneutronic Nuclear Reaction in Metal Deuterides," Further theory combining sonofusion and Arata's aneutronic results.

The presentations are now a matter of record of the APS. It will be interesting to see if this now becomes an annual event for Cold Fusion.

Akira Kawasaki, who provided this new update, described the event: "The APS has a *Bulletin of the American Physical Society* vol. 43, no. 1 March, 1998 (catalog of abstracts) of over a thousand pages, listing all of the activities and all of the simultaneous oral presentations being presented during the five days of the meeting. It looks like a telephone book. No way can an individual cover even a *fraction* of all the events and presentations, much less absorb the posters and exhibits thoroughly. A hectic affair. There were over a dozen lecture halls where oral presentations were being made simultaneously, most with twelve-minute time allotments for presentations. The turnout at the hall where the cold fusion presentations were made had at most forty people in attendance—which filled up not quite half of the room capacity. Other sessions were not overflowing either.

Those from the cold fusion community who attended the presentations were: Akira Kawasaki, Russ George, Dr. Talbot Chub, Dr. Scott Chubb, and Dr. Tom Passel.

Tom Passel and Akira Kawasaki took some pictures. Mr. Kawaskai commented, "It should be of historical interest as an event that happened, finally, for cold fusion. Rumors had it that there was intense opposition to the presentations being included and cataloged. Apparently there were stronger prevailing pressures that had the session included. Time marches on."

Your ad could be in this space.
Call or write for a media kit
Infinite Energy Magazine
Cold Fusion Technology, Inc.
P.O. Box 2816
Concord, NH 03302-2816
Phone: 603-228-4516 Fax: 603-224-5975
http://www.infinite-energy.com

Stanley Meyer, "Water-Fuel Cell" Inventor and Promoter, Dies Suddenly

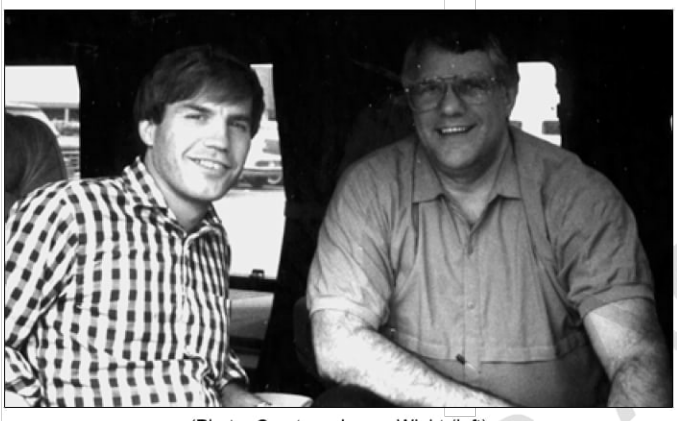

(Photo: Courtesy James Wight (left), Stan Meyers (right).

Stanley A. Meyer, the controversial Ohio inventor who had claimed his technology could produce a hydrogen-oxygen mixture with a minimal energy input (compared with conventional electrolysis) died on March 21, 1998. He had gained a world-wide following of adherents and people who had invested in his activities—Water Fuel Cell (Central Operating Headquarters, 3792 Broadway, Grove City, Ohio). He was famous for his claimed "water fueled car," which was exhibited *symbolically* in the BBC/CBC 1994 documentary on cold fusion "Too Close to the Sun."

There were also those who were initially curious about Meyer's work, such as the editor of this magazine, the late Christopher Tinsley of the U.K., and the late Admiral of the British Navy, Sir Anthony Griffin, but who became frustrated by being unable—or, more to the point, *not allowed*—to confirm (or reject finally) Meyer's claims.

I have absolutely NO DOUBT today that Stanley Meyer was his own worst enemy. IF—and a very big IF—he had discovered the technological process that he had said he had, there is *no way* that a reasonable, straightforward marketing strategy would have failed to make his technology quickly spread world-wide. He could have become very influential and very rich.

There remains a very strong suspicion that he had no such process, even though he conducted a demonstration (before this writer and another engineer at the Meyer lab in 1993) of the production of copious hydrogen/oxygen gas from what *visually seemed* like a small input power. But Meyer was exceedingly paranoid and he flatly refused reasonable requests by us and others to test the *performance* —the input/out power ratio, even with the proviso that we did not have to "look into his black box" of electronics feeding his rather simply constructed stainless steel electrode, alternating current and voltage cell. The last such refusal—this one in public and recorded on video tape—was at the ANE meeting in Denver, Colorado in 1997. Then Meyer loudly and falsely protested to me that he would "lose his patent rights" if he were to release anything but complete, integrated systems—such as a water-fueled vehicle. Excuses, excuses, excuses...

An extensive effort in 1993 and 1994 by engineers in the US and in the UK to reproduce the Meyer WFC process via information in his basic patents failed to discover how he performed the demonstrations he had conducted.

In 1996, Meyer lost a long-lasting Ohio civil court battle accusing him of "egregious fraud" against a former associate. As was Meyer's custom, he ascribed this and other alleged assaults on him to various conspiracies. To television cameras, he suggested that he had been offered huge sums of money to "suppress this technology," but that he had refused these sums. One had the impression that he really believed that there were conspiracies against him. That is a tragedy, a very compounded tragedy if he had actually come up with something novel and useful that he was hiding.

This is a very complex human and scientific story that we shall want to cover in greater detail in a future issue of *Infinite Energy*. There are other processes and inventions that suggest that splitting water molecules with much greater efficiency than with conventional electrolysis may be possible. Certainly there are other novelties within water—"cold fusion," to be sure—that really *do* produce prodigious quantities of energy, but not in the mode Meyer claimed. For now, here are some of the facts surrounding Meyer's death:

He was apparently eating dinner at a

New Energy Times Archive

Grove City, Ohio restaurant, when it is reported he jumped up from the table, yelled that he'd been "poisoned," and rushed out into the parking lot, where he collapsed and died. It has been reported by Meyer's associates that Meyer had just secured funding for a $50 million research center near Grove City Ohio, where he had his famous workshop-lab, but there is no way to confirm or reject this at the moment.

An article on March 27, 1998 in the *Columbus Dispatch* newspaper said that a preliminary autopsy shows that he died of a brain aneurysm, but the Franklin County Coroner was waiting on toxicology tests for a final determination.

Newspaper reports of Meyer's death received via e-mail:

"MEYER Stanley Allen Meyer, age 57, of Grove City, died Saturday, March 21, 1998. He was an inventor for 17 years and achieved his life's work on the Water Fuel Cell just days before his death. Stanley was a graduate of Grandview High School and attended Ohio State University (OSU). He was also an Army Veteran, formerly employed by Battelle Memorial and while in this capacity he developed the ATM concept. Survived by wife, Marilyn; twin brother, Stephen Foster Meyer; brother, Henry B. Meyer; sister, Barbara Ferret; numerous nieces and nephews. Preceded in death by mother and father Marie Hessler Meyer and Henry Stewart Meyer. Friends may call Thursday 6 p.m., EVANS FUNERAL HOME, 4171 E. Livingston Ave., where a memorial service will be held at 6:30 p.m. Pastor Gary A. Keller officiating. In lieu of flowers, family requests donations to a charity of your choice. "

•••

"SERVICE HELD FOR GROVE CITY INVENTOR, March 27, 1998

" A memorial service was held last night for a Grove City inventor who was dead on arrival at Mount Carmel Medical Center after he became ill last Friday night at a Grove City restaurant.

"Stanley A. Meyer, 57, suffered a ruptured brain aneurysm, said Dr. William Adrion, Franklin County coroner. However, Adrion will wait for results of a toxicology examination before ruling on the cause of death, said Capt. Dennis Deskins of the Grove City police department.

"For at least the past 20 years, Meyer has been working on a water fuel cell, a process that he claimed could cheaply remove massive amounts of hydrogen from water and create fuel for everything from automobile engines to power plants and spaceships.

"Meyer's wife, Marilyn, other relatives and his attorney refused to comment. The memorial service was held at Evans Funeral Home, 4171 E. Livingston Ave. "

From his friend, James Wight:

"This is the way I found out about the death of Stan Meyer and is my post to the Scienergy.hydrogen News Group. Stan was a friend and mentor of mine. This man had invented and patented a new (controversial) process that made it possible for overunity generation and use of hydrogen in every energy consuming device. It was controversial because he never let it be tested to prove it by the 'scientific' community. I believe if he had done that he would have been dead much sooner. I have known Stan and had a close relationship with him for over 10 years. I have been to his lab and seen his technology in operation. I have begun an investigation into his death and what will happen to the rights to his patents and if the work and the money he was to get will still continue as planned. I am trying to find out if his lab property is in the hands of his family and associates or if it has been taken by the MIB [Men in Black] just as Nicola Tesla's was..."

I wish to thank James Wight for discussing Stanley Meyer with me. I am sure James learned a lot from hearing my own experiences. It is a tragedy that this sincere and good friend of Stan's is unable to know for sure today whether his friend, in whom he had trusted (and invested in a small way), was not just fooling himself, fooling the world, or worse: allowing important knowledge to be taken to his grave. E. Mallove

Aspden Patent continued from pg. 46

and protons or antiprotons. This work was all published before 1989.

The anomalous electrodynamic forces that exist in the heavy ion/electron interaction imply a hidden source of energy and so of heat but the Applicant's research was aimed essentially at proving the modified law of electrodynamics dictated by that research. Certainly.,whilst the ability to accelerate heavy ions by drawing on a hidden source of field energy was one of the Applicant's pursuits, at no time had the Applicant contemplated the prospect of a fusion reaction of the kind implied by Fleischmann and Pons.

Nevertheless, as soon as that latter work was reported, the research knowledge arising from the author's investigations was seen as relevant in the onward exploration of the excess heat phenomenon.

The Applicant was not only interested because of the excess energy aspect. There was the no-neutron feature and the fact that the process involved ion migration through water. There was the fact that the deuteron was the primary agent and this Applicant had shown.,from the theory of the deuteron mass and its magnetic moment, that deuterons undergo cyclic changes of state and in the state which prevails for one seventh of the time. the deuteron has a neutral core, having transiently shed a beta particle. More than this, however. the author had become involved at the time with two inventions. one of which later became the subject of a U.S. Patent (No. 5.065,085) and these involved anomalous energy activity in a thermoelectric context which bears upon the cold fusion issue.

The other, lesser important, of these inventions was concerned with 'warm' superconductivity. The Applicant's research had suggested that substances having certain molecular mass forms are adapted to absorb impact by conduction electrons in such a way that the change of inductive energy accompanying the collision is conserved until the resulting EMF changes can impart the energy to another electron. This meant that the thermal energy of a heavy ion in the substance could be reduced to feed the normal resistance loss associated with the current. This was therefore, a process by which anomalous heat energy activity was involved in electrodynamic interactions between heavy ions and electrons.

The more important invention of the two just mentioned was concerned with the anomalous behaviour of a thermoelectric interface between two metals when subjected to a strong magnetic field in a rather special conductor configuration. Here, the Nernst Effect operates to cause heat carried by electrons in a metal to be converted into an electric potential energy by the ordering action of a transversely directed magnetic field.

The essential requirement for the action of the Nernst Effect is that there is a temperature gradient in the metal and, given such a temperature gradient, and the magnetic field. there will then be an electric potential gradient set up within the metal. Now. a potential gradient inside a metal conductor implies that there is inside the body of the metal a distribution of electric charge not neutralized by normal metallic conduction. The polarity of that charge is determined by the direction of the thermal gradient and the orientation of the i magnetic field. It can be negative or positive by choice in the design of the apparatus used.

Besides this, the Applicant knew that the flow of a strong current through a metal conductor will promote what is known as the pinch effect in which electrodynamic forces act on the negative electron charge carriers to pinch them inwards and so set up an excess negative charge distribution inside the metal conductor.

This, plus the additional feature that a strong current flow through a metal conductor that is populated by free deuterons will promote a migration of deuterons that will bring them more frequently into near collision, all militated in favour of an invention proposing the provision of a supplementary high current closed circuit through the cathode of a cold fusion cell. That, indeed, became the subject of the patent application which the Applicant filed in U.K. on Apr. 15, 1989, this being the priority application relied upon in the U.S. Patent Application under petition.

The Applicant, therefore, had reason to believe that the work on cold fusion would progress if the auxiliary current activation circuit were to be used.

However, in the event, the pioneer work of Fleischmann and Pons became the subject of such criticism that there was no prospect of getting R & D funding to take the subject invention forward and one is confronted with a chicken and egg scenario where disbelief of cold fusion as a scientific possibility stands in the way of securing patent grant and the doubts about securing a patent stands in the way of finding sponsorship for the development.

The Fusion Criteria Reexamined

There are three criteria that need to be satisfied simultaneously to promote and enhance the cold fusion reaction of deuterons.

Firstly, there is the background incidence of the virtual mu-meson field which is trying everywhere to create protons. This is a natural activity that cannot be controlled. It is a statistical effect, but one can calculate the probability governing proton creation fluctuations in a given volume of cathode material. See comments below.

Secondly, there is the need to bring the deuteron partner in the fusion process into close proximity with the target deuteron. In hot fusion reactions this is achieved by the motion associated with thermal activity. In cold fusion it is achieved by

Aspden Patent continues on page 61

New Energy Times Archive

Words to Eat....

Over the years, it would be difficult to find a more severe, knee-jerk, and consistently outrageous critic of cold fusion than physics professor Dr. Robert L. Park of the University of Maryland. He is widely quoted by science journalists who read his weekly "What's New" electronic column, which circulates madly on the sci.physics.fusion forum ("Fusion Digest") and no doubt on many others—especially when he is beating up on cold fusion again. As one would expect, Park has never attended a cold fusion scientific conference. Like the Church Fathers of the 17th century who persecuted the Copernicans, he receives his wisdom from the sacred books of the High Church of Establishment Science—no need to soil himself with the gritty details of experiments and such. He *knows* they're all wrong when they contradict *his* holy writ.

Park harshly attacks not only cold fusion, but alternative medicine, and what he has called "electro-phobia"—scientific studies purporting to show that there could be effects on biological systems from low-level electromagnetic fields. In fact, *no* study of reported scientific anomalies seems to escape his mocking pen, whether it be phenomena connected with "extrasensory perception," "UFOs," or cryptozoology — no matter what level of care has been applied in the research. You see, Bob Park "knows it all"— as do so many of his colleagues in the APS. To Park and his kindred spirits in the APS who allow his scientific bigotry to masquerade under the banner of "news," Park is on the right wavelength: the major physics theories are in large measure complete, the territory yet to be discovered contains merely interesting details. Excluded are all things that seem to clash with this wisdom.

The American Physical Society promotes Park's "What's New" on its WWW site, yet Park's sign-off on his column contains the provocative caveat: "THE AMERICAN PHYSICAL SOCIETY (Note: Opinions are the author's and are not necessarily shared by the APS, but they should be.)" Perhaps in due course the APS will reconsider the wisdom of having Park as its de facto Big Mouthpiece — but don't hold your breath.

For the record, we present some delectable words about cold fusion that Park will have to eat. The buffet can't come soon enough. It will be a joy to behold! For the record, we agree with at least *one* thing that Park has written, *if* it is applied to him, not his victims: **"...a Ph.D in science is not an inoculation against foolishness-- or mendacity."**

Dr. Robert Park
AIP Emilio Segrè Visual Archives, Physics Today

"Inept scientists whose reputations would be tarnished, greedy administrators who had involved their institutions, gullible politicians who had squandered the taxpayers' dollars, lazy journalists who had accepted every press release at face value — all now had an interest in making it appear that the issue had not been settled. Their easy corruption was one of the most chilling aspects of this sad comedy.

"To be sure, there are true believers among cold-fusion acolytes, just as there are sincere scientists who believe in psychokinesis, flying saucers, creationism and the Chicago Cubs. The lesson from 'Too Hot to Handle' is that a PhD in science is not an inoculation against foolishness -- or mendacity."

***The Washington Post*, May 15, 1991**

"Most screwy ideas turn out to be screwy ideas ...[cold fusion] was preposterous to begin with."

***Science*, July 6, 1990**

"A seance of true believers."

Describing (without even having been there) the First Annual Conference on Cold Fusion in Salt Lake City, March 1990

"The [National] Academy [of Sciences] had no desire to invite the inevitable comparisons of tokamaks and Rubbermaid dishpans during the peak of the cold fusion hysteria."

...."The final coroner's report [DOE report on cold fusion] is due November 15."

***What's New*, May 19,1989**

"The corpse of cold fusion will probably continue to twitch for awhile, even after two nights of unrelenting assaults at the APS Baltimore Meeting." ***What's New*, May 5, 1989**

"The corpse of cold fusion finally stopped twitching this week when the DOE Cold Fusion Panel drafted its interim report. It took only four pages to establish that no persuasive evidence of cold fusion exists and that new efforts to find cold fusion are not justified..."

***What's New*, July 14, 1989**

"Tritium contamination of the palladium used in cathodes has been identified as the source of the 'Elvis Sightings' that have kept the spark of hope alive in the breasts of cold fusion loyalists....Be patient, the long night of cold fusion is almost at an end."

***What's New*, June 8, 1990**

"Cold Fusion Faithful Hold Their Fourth Annual Seance in Maui...Who says cold fusion isn't practical? As some of us slog through the slush, this tiny band of true believers sips cool drinks in celebration of MITI's $30M 4-year 'new hydrogen' energy project."

***What's New*, December 10, 1993**

"A Few Cold Fusion Die-Hards Gather in Anaheim and Monte Carlo—The only story was the contrast in ambiance. A luxury hotel in Monte Carlo, near Fleischmann and Pons' luxury lab, was the venue for the 5th International Cold Fusion Conference; the wine bill was picked up by an unnamed benefactor. A week earlier, at the American Chemical Society Meeting in Anaheim, cold fusion was relegated to a poster session in a hotel parking garage..." ***What's New*, April 28, 1995**

"The Whereabouts of Stanley Pons is the Last Remaining Mystery in the bizarre saga of cold fusion...News reports say his phone has been disconnected and his house is up for sale. A colleague is teaching his classes."

***What's New*, October 26, 1990**

"Oh No! Cancer from Power Line Fields and Cold Fusion are Back??...What a week for science! Researchers in four laboratories report that cold fusion experiments work as well with ordinary water as with heavy water. (That I can believe!) At the third annual cold fusion seance in Nagoya this week..."

***What's New*, October 23, 1992**

"Tomorrow Marks the 2nd Anniversary of the Cold Fusion Claim by Pons and Fleischmann. It is also the anniversary of Ronald Reagan's 'Star Wars' speech. Coincidence, you say, but perhaps no! Pons and Fleischmann may have consulted Nancy Reagan's astrologer." ***What's New*, March 22, 1991**

"Cold Fusion: It's Back! And Now it Neutralizes Radioactivity. It was a stern test of my dedication. I had been assured that, because of its importance, the story would be in the first hour of 'Good Morning America' on ABC. Alas, it was bumped by a story about the Loch Ness monster popping up in a lake in Turkey..." ***What's New*, June 13, 1997**

"Cold Fusion: Sometimes the Messenger Should Be Shot. In a grossly irresponsible report in June, ABC's Good Morning America science editor Michael Guillen showed a device 'neutralizing radioactivity.' According to Guillen, 'the Patterson cell' has mainstream scientific support..." ***What's New*, August 1, 1997**

New Energy Times Archive

VIDEO TAPES of the

Third and Fourth International Symposiums on New Energy (1996 and 1997)

are available through Cold Fusion Technology, Inc.

ISNE3 - 1996

TAPE #	SPEAKER	LECTURE TITLE
1-AA	Hal Fox.....	Cold Fusion: Three New Types of Energy
2-AA	Ron Kovac.....	Plasma Shaping: New Mass & Energy Source
3-AA	Dennis Cravens.....	Patterson Fuel Cell
4-AA	Tom Valone.....	Free Energy & Propulsion
5-AA	James Griggs.....	The Hydrosonic Pump
6-AA	Eugene Mallove.....	Cold Fusion & New Energy
1-BB	Harold Aspden.....	Vacuum Spin as New Energy Source
2-BB	Paul Pantone.....	G.E.E.T. Device
3-BB	Moray King.....	The Super Tube
4-BB	Robert Golka.....	Ball Lightning
5-BB	R.M. Santilli.....	Hadronic Energy: New Subnuclear Source
6-BB	John Earle.....	Windmill Energy
7-BB	A. Michrowski.....	Brown's Gas/Energy Autonomous Homes
9-BB	Brian O'Leary.....	Free Energy, O Point & Consciousness
10-BB	Yost/Hull.....	Tesla Coils, Electrostatics, & Electric Propulsion
13-BB	Josef Gruber.....	Economic Effects of Space Energy Tech.
14-BB	Glen Rein.....	Anomalous Info. Storage in Water
15-BB	Larry Davenport.....	Towards Flight without Stress, Strain or Weight
16-BB	Tom Bearden.....	Regauging and Multivalued Potentials
17-BB	Mike Fisher.....	How to Market Your Advanced Technology
18-BB	A & P Correa.....	Pulsed Abnormal Glow Discharge Reactor
19-BB	Dale Pond.....	The Keely Musical Dynasphere
21-BB	Robert Emmerich.....	On Energy Measurement
24-BB	Martin Burger.....	Tidal Power
25-BB	Jeane Manning.....	The Coming Energy Revolution
26-BB	George Wiseman.....	Solid State Energy
27-BB	Gerald Orlowski.....	50 HP Free Energy Unit
1-WS	Dale Pond.....	Workshop
2-WS	A. Michrowski.....	Workshop
3-WS	Paul Pantone.....	Workshop - GEET Device
4-WS	Eugene Mallove.....	Workshop - Cold Fusion/New Energy
5-WS	Brian O'Leary.....	Workshop
9-WS	Dennis Cravens.....	Workshop-Patterson Cell
11-WS	Tom Valone.....	Workshop
X-1	S. Marinov.....	Siberian Coliu Machine

- **Please order by Number, Name, and Topic**
- **Enclose payment:**

Price *per tape*: U.S. $20.00

Add first class shipping charges within the U.S.:
$4.00 for first tape, plus $1.00 per each additional tape.

(Foreign air mail shipping can be billed to your credit card.)

SEND Payment to:

Cold Fusion Technology, P.O. Box 2816,
Concord, NH 03302-2816 FAX: 603-224-5975
••• Please allow four weeks for delivery •••

ISNE4 - 1997

TAPE #	SPEAKER	LECTURE TITLE
1	Moray King.....	Overview of Inventions
2	William Tiller.....	Robust Physical Domain Correlates of Subtle Energies Actions
3	Glen Rein.....	Bioassay for Negative Gaussian Fields
4	M.A.K. Lodhi.....	Power Production & Pollution Suppression by Helio-Aero-Gravity Concept
5	Daniel Nightwolf..	Planetary Zero Point Energies
6	Josef Gruber.....	Economic Effects of Space Energy Tech.
7	Paul Pantone.....	Fuels of the Future-Zero Pollution
8	Marc Whitford.....	Possible Field Propulsion Tech. by Transient Luminescent Phenomena
9	Tom Beardon.....	Energy Flow, Collection, & Dissipation in Overunity EM Devices
10	Hal Fox.....	Charge Cluster Transmutation
11	Dale Pond.....	Keely Dynasphere-Roots of Vibratory Etheric Tree
12	Austin Rust.....	Controlled Blow-out Method of Gas & Oil Production and World Peace
13	Peter Graneau....	Extracting Intermolecular Bond Energy/Water
14	Joseph Newman.	Emerging Revolutionary Electromagnetic Tech.
15	Roy McAllister.....	Safe & Dependable Hydrogen Storage
16	John Moreland....	Update on Continuing Research into T.H. Moray & Other Free Energy Devices
17	Ron Kovac.....	Atomic Mass 5W/Helium & Catalytic Metals
18	Andrew Michrowski	Scalor Waves Reviewed
19	Tom Valone.....	Intro. to the 1st Documentary on Free Energy "Race to Zero Point"
20	Edmund Storms..	A God's Eye-View of Cold Fusion
21	Eugene Mallove..	New Developments in Cold Fusion
22	Stanley Meyer.....	Water As Fuel As Endless Source of Clean Energy
23	Saul-Paul Sirag...	Hyperspace Crystallography
24	Robert Emmerich	Method of Power & Energy Mgmt
25	Reed Huish &..... Mike Fischer	The Commercial Pathway to New Energy
26	A.G. Obolensky...	Gyromagnetic Gain from Absolute Motion
27	Maury Albertson..	Hydrogen Economy to Replace Petroleum Economy
28	Layne Wright.....	Cylidrical Capacitors Found in Hendershot Fuelless Generator
29	Donald Reed.....	A Vortex as Topical Archtype
30	David Wallman....	Biomass-Gasification by Rapid Oxidation
31	H.E.Chip Ransford	Design Consideration for Rapid Commercial Development of Fleishman-Pons Reactor
1-WS/97	M.A.K. Lodhi.....	Workshop
2-WS/97	Paul Pantone.....	Workshop
3-WS/97	Daniel Nightwolf..	Workshop
4-WS/97	Marc Whitford.....	Workshop
5-WS/97	Peter Graneau....	Workshop
6-WS/97	Dale Pond.....	Workshop
7-WS/97	Tom Valone.....	Workshop
8-WS/97	Roy McAllister & MauryAlbertson	Workshop
9-WS/97	Donald Reed.....	Workshop

"The best way to participate in conferences you missed."

ORDER YOUR 1996 and 1997 ISNE VIDEOTAPES TODAY!

New Energy Times Archive

NEW ENERGY UPCOMING EVENTS

Invitation to Attend Special Sessions and Workshop on Low Energy Nuclear Reaction at the ANS Summer Meeting in Nashville, June 7 - 11th, 1998

Transmutation and Isotope Production by Low-Energy Nuclear Reactions in Solids represent a new area of nuclear technology that has grown out of, but is distinctly different from "cold fusion". There is strong evidence that transmutation products ranging from tritium to a spectrum of product isotopes can be created in select solids like nickel and palladium when loaded with deuterons or protons using a variety of techniques such as electrolysis, plasma discharges, or high pressure. While in its infancy, this phenomenon has profound and practical implications for the nuclear field. Some research is aimed at developing a new type of energy cell based on Low-Energy Nuclear Reactions, while other research is directed at ways to utilize the technique for radioactive waste management. With respect to the latter, experiments have been performed starting with natural uranium and thorium to seek reduction in the radioactivity.

A number of leaders in the area are participating in the sessions and will also be involved in the workshop. The workshop provides an especially good opportunity for ANS attendees to interact with the scientists involved in this novel research. Much of this work is not well known outside of a small group involved in the research, so these sessions offer a unique opportunity to find out the latest results and directions The two sessions on Transmutation and Isotope Production by Low-Energy Nuclear Reactions in Solids are scheduled for Tuesday, while the workshop is scheduled for Wednesday morning.

Workshop on Transmutation and Isotope Production by Low-energy Nuclear Reactions in Solids

This workshop is intended to provide interested ANS members with an overview of the field of Transmutation and Isotope Production by Low-Energy Nuclear Reactions in Solids. A panel consisting of key researchers in the field (John Fisher, R. A. Oriani, Mike McKubre, Yeong Kim, Talbot Chubb, Heinz Hora, Lali Chatterjee, Maria Okuniewski) will provide a brief presentation. Issues to be addressed include the present status of this research, the status of current theory, proposed new experiments, scale-up issues and possible future applications, including heat production and radiation ameliation.

Following the panel presentation, the workshop will be open to questions and comments from attendees. A demonstration cell will be run to illustrate the typical operation of a low energy nuclear reaction system.

COLD FUSION AND NEW ENERGY SYMPOSIUM 1998

Speakers, discussions, demonstration units,

Sunday, October 11, 1998

8:00 a.m. - 10:00 p.m.

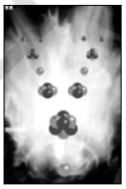

Holiday Inn
The Center of New Hampshire Convention Ctr.

See first page of this issue for registration form.

Sixth Russian Conference on Cold Nuclear Transmutation

September 28-October 5, 1998

Hotel Olimpiyskiy, Dagomys, near Sochi

Organizers: Fax: 095-939-29-91

9th Annual International Forum on New Science
October 15 - 18, 1998
Marriott Hotel, Ft. Collins, CO
"Making a difference: in health, energy, ecology, housing, agriculture, psychology, science, and life"
The International Assoc. for New Science
P.O. Box 8127, Ft. Collilns, CO 80526
970-482-3731
fax: 970-482-3120
www.ians.org; email: science@ians.org

CALENDAR

2nd Low-Energy Transmutation Meeting
College Station, Texas
Sept.13-14, 1996

ICCF6—Sixth International Conference on Cold Fusion
October 13-18, 1996
Hokkaido, Japan

Building Energy—Insuring a Sustainable Future
March 12-15, 1996
(Sponsor: Northeast Sustainable Energy Association)
Cromwell, Connecticut

International Symposium on New Energy
(Sponsor: Academy for New Energy)
May 23-26, 1997
Denver, Colorado

International Tesla Society Meeting
July 10-13, 1997
Colorado Springs, CO

Cold Fusion Conference
Asti, Italy
November 27-30, 1997

ICCF7—Seventh International Conference on Cold Fusion
April 19-24, 1998
Vancouver, CANADA

Russian Conference "Fundamentals of Natural Sciences
St. Petersburg, Russia
June 22 - 27, 1998

Institute for New Energy Symposium
Salt Lake City, Utah
August 14-15, 1998

Infinite Energy Magazine's **Cold Fusion and New Energy Symposium 1998,** October 11, 1998
Manchester, New Hampshire

Special Sessions and **Workshop on Low Energy Nuclear Reactions** at the ANS Annual Meeting
Nashville, Tennessee
June 8-11, 1998

9th Annual International Forum on New Science
Marriott Hotel, Ft. Collins, CO
October 15 - 18, 1998

ICCF-8, Eigth International Conference on Cold Fusion
Fall, 1999 in Italy
(Exact location pending

New Energy Times Archive

For an Excellent Introduction to Cold Fusion and New Energy Technology.....

ORDER THE ACCLAIMED

VIDEO TAPE SET OF MIT COLD FUSION DAY- January 21, 1995

at the Massachusetts Institute of Technology

Four (4) two-hour VHS video tapes—**8 hours total viewing**— are available as a set, or individually. These were only slightly edited from professionally taken video footage of the day-long Cold Fusion session at MIT on January 21, 1995. The tapes include the following material:

TAPE #1

Dr. Eugene F. Mallove (Cold Fusion Tech.)
"Cold Fusion and New Energy Technology - An Overview"

Dr. Peter Graneau (Northeastern Univ. for Electromagnetic Research)
"Anomalous Forces in Water Plasma Explosions"

TAPE #2

Buford ("Ray") Conley
(MIT, graduate student, Dept. of Aero/Astro Eng.)
"Light Water Excess Heat Experiments"

Fred Jaeger (ENECO, Salt Lake City)
"Patents and Commercialization"

Professor Peter L. Hagelstein
(MIT Dept. of Electrical Engineering and Computer Science)
"Cold Fusion: What We Know and What We Don't Know"

TAPE #3

Professor Peter Hagelstein (Continued from TAPE #2)

Professor Keith Johnson
(MIT Dept. of Materials Science and Engineering)
"Progress in the Theory of Excess Heat" *and Excess Heat*- The Movie, now being made by Hollywood!

James L. Griggs
(Hydro Dynamics, Inc., Rome, Georgia, USA)
"The Hydrosonic Pump: Excess Power and Other Effects"

TAPE #4

Bertil Werjefelt (PolyTech(USA), Hawaii)
"Energy from Magnetic Materials and Magnetic Fields"

Dr. Eugene F. Mallove(Cold Fusion Technology, Concluding Remarks

The tapes include the speakers' presentations as well as question and answer sessions. There is footage of the Hydrosonic Pump under test as well as close-up footage of rotor surface melting effects. Bertil Werjefelt shows footage of experiments in his own laboratory. There are scenes of Japanese researchers from Sumitomo, Hitachi, and other companies and universities now involved in their claimed extraction of energy from magnetic materials. These efforts are now said by these researchers to be proceeding toward commercialization. Actual experiments are seen in progress. The tapes are VHS cassettes in NTSC format and range from 120 to 127 minutes each.

To order the full set of four, two-hour tapes, please send check or money order to Cold Fusion Technology for $79.95 plus $5.00 shipping and packing, within U.S. and Canada. [For other foreign orders, please replace the $5.00 shipping fee with $30.00 for air shipment.] To order *individual tapes,* please specify which tape(s). Please send check or money order for $25.00/tape, plus $3.00 shipping and packing if only one tape, or $5.00 total if more than one tape. Tapes are Copyright 1995, Cold Fusion Technology.

Please send tape payments to:
Cold Fusion Technology
P.O. Box 2816,
Concord, NH 03302-2816
Fax: 603-224-5975, Phone: 603-228-4516.

NEWTON versus EINSTEIN

by Drs. Peter and Neal Graneau
Hardcover, 219 pages
Only $19.95 (in North America)
$26.95 (all other foreign)
(includes First Class/Airmail shipping)

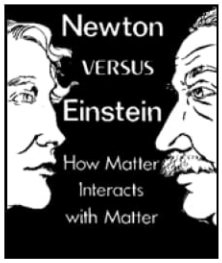

"An absolute MUST read... "E. Mallove

Cold Fusion Technology, Inc.
P.O. Box 2816
Concord, NH 03302-2816

... THE REVOLUTION IS COMING!

The Coming Energy Revolution

by Jeane Manning

1996, published by Avery Publishing Group, Garden City Park, New York
230 pages, illus., resource list, glossary, indexed, ISBN 0-89529-713-2.

$15.95 (US AND CANADA)
$22.95 (OTHER FOREIGN)
(Includes First Class/Airmail shipping)

NOW AVAILABLE FROM

COLD FUSION TECHNOLOGY
P.O. BOX 2816
CONCORD, NH 03302
Phone: 603-228-4516
Fax: 603-224-5975

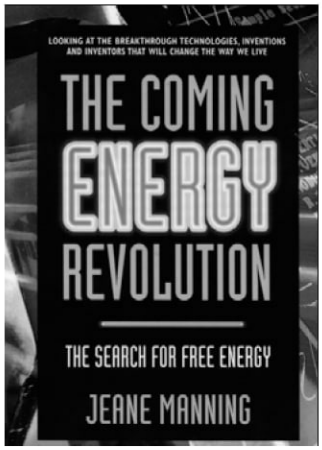

Electric Spacecraft Journal Network

Keeping you informed about independent research...

The ESJ Network assists individual research efforts, facilitates cooperation among experimenters and provides an open forum for the exchange of information an ideas. The Network provides a medium for direct interaction among associates. We urgeindividuals doing independent research to network.

The Network welcomes those engaged in experiments, analysis, conceptual thinking, and investigative research, who are willing to interact with others. Inquiries to: 704-683-0313 or 704-683-1280, Fax: 704-683-3511

Subscriptions to the quarterly *Electric Spacecraft Journal*, 73 Sunlight Drive, Leicester, NC 28748 USA. Annual Subscription rates: U.S.A. $24; Canada and Mexico $29; Overseas $39.

AND DON'T FORGET. . . .

READ

FIRE From ICE

New Energy Times Archive

1996 COLD FUSION & NEW ENERGY SYMPOSIUM
(at the Cambridge Marriott, 1/20/96)

VIDEO TAPES **(7 hours of *ESSENTIAL* viewing!)**

On the four VHS tapes.....

- **Dr. Eugene F. Mallove**
- **Jed Rothwell**
- **Dr. Mitchell Swartz**
- **Dr. Dennis Cravens**
- **Dr. James Patterson**
- **James Griggs**
- **Hal Fox**
- **Prof. Keith Johnson**
- **Chris Tinsley**
- **Dr. Paul LaViolette**
- **Dr. Hal Puthoff**
- **Japanese Magnetic Motor Researchers**

You must order these tapes...

if you want the best up-to-date overview of cold fusion and new energy by leading researchers and people in the know.

Including views of the **Power-Gen '95 CETI Patterson Power Cell** demo equipment, magnetic motors, video clips of the "Cincinnati Group's" experiments, operation of the **Hydrosonic Pump™**, video footage of **Yusmar** devices in Moldova, etc., etc.

ONLY $99.95 (U.S. & Canada)
($124.95, other foreign, includes air-mailing)
Send Payment or Credit Card Info to:
Cold Fusion Technology
P.O. Box 2816
Concord, NH 03302-2816
FAX: 603-224-5975

COLD FUSION TIMES

The Journal of the Scientific Aspects of Loading Isotopic Fuels Into Materials

Published Quarterly

Publisher and Editor
Dr. Mitchell Swartz

Annual subscription rate is $120.00. Single issues are $40.00. There is an extra postage and handling charge of $5.00 per order outside of the United States.

P.O. Box 81135
Wellesley Hills, MA USA
02181

SHOW YOUR COLORS
(Red, White, & Blue) and Spread the Message!
Get Your *Infinite Energy* Cold Fusion Vinyl Bumper Sticker(s) Today!

Actual Size: 3 in. x 12 in. (7.6 cm x 30.5 cm)

	U.S. and Canada	Other Foreign	
1 Sticker	$5.00	$6.00	Please call
5 Stickers	$20.00	$24.00	for quote on large orders

COLD FUSION
Infinite Energy NOW!
GET THE FACTS: INFINITE ENERGY MAGAZINE, P.O. BOX 2816, CONCORD, NH 03302 — USA

ORDER FROM:

Cold Fusion Technology
P.O. Box 2816
Concord, NH 03302-2816

YOUR AD COULD BE IN THIS SPACE.
CALL OR WRITE:
COLD FUSION TECHNOLOGY, INC.
FOR AD RATE INFORMATION

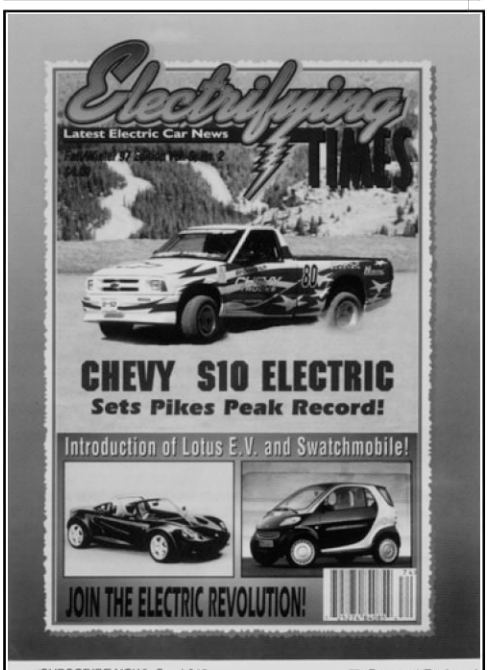

SUBSCRIBE NOW! Send $12. ☐ Payment Enclosed

ELECTRIFYING TIMES
63600 Deschutes Market Road
Bend, Oregon 97701
541/388-1908, FAX 541/388-2750
etimes@teleport.com
http://www.teleport.com/~etimes

EXOTIC RESEARCH CONFERENCE

July 23-26,1998
Free Energy - Medicine - 21st Century Technology
Demonstrations - Presentations - Workshops

Program on Website: http://www.exoticresearch.com

Exotic Research
P.O. Box 411
Stanfield, AZ 85272

FREE INFORMATION

New Energy Times Archive

HOW TO THINK ABOUT THE MARINOV MOTOR

by Jeffery D. Kooistra
4148 Kentridge Dr., SE, Grand Rapids, MI 49508
616-281-8879; Internet: 75202.2023@compuserve.com

The problem for Physics posed by the Marinov motor can be found in any decent college textbook on Electromagnetism. Since I used the text Electromagnetic Fields by Wangsness (1), I will refer to that one.

On page 222, in section 13-3, entitled "The Force Between Current Elements," Wangsness presents the following two equations (don't worry--you need not be math savvy to understand what I'm about to say):

$$d\mathbf{F}_{e'\to e} = \frac{\mu_0}{4\pi}\frac{I\,d\mathbf{s}\times(I'\,d\mathbf{s}'\times\hat{\mathbf{R}})}{R^2} \qquad (13\text{-}17)$$

and

$$d\mathbf{F}'_{e'\to e} = -\frac{\mu_0}{4\pi}\frac{[(I\,d\mathbf{s})\cdot(I'\,d\mathbf{s}')]\hat{\mathbf{R}}}{R^2} \qquad (13\text{-}20)$$

It is understood known that any circuit carrying an electric current will exert a ponderomotive force (matter moving force as opposed to electromotive) upon another current carrying circuit, and when we talk about "current elements" we're discussing how "a little part of one current carrying circuit" interacts with "a little part of another current carrying circuit" in terms of forces.

What does Wangsness have to say about the above two equations?

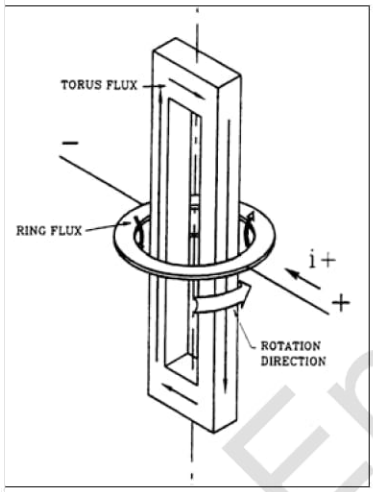

Figure 1. The essential Marinov motor.

"Although (13-17) and (13-20) will lead to the same value for the total force between complete circuits, they can give different results when applied to the elements." This just means that if you look at both whole circuits, the two equations will give you the same answer for the force between both whole circuits, but not necessarily for the forces between any two small sections.

Wangsness points out that in many ways (13-20) is superior to (13-17). It's a nicer form than (13-17). It involves the straight line interaction between any two elements and thus satisfies Newton's third law very simply. And yet (13-17) is the accepted form of the force law between two circuits in modern E&M. Why should this be so?

Wangsness goes on to say that "(13-17) cannot be written in the form of a product of the element I **ds** and something that is independent of the element, that is, a *field*. Since this product property is essential to the development of a theory based on fields, we abandon (13-20)."(2)

So, just like that, we dump one equation in favor of another because the first cannot be made to work in a field theory. And almost all of Physics is field theory. But recall that Wangsness did mention that the two equations make different predictions about the forces between different current elements, even though they both work equally well for entire circuits. What if it were to be shown that those different predictions made by the two equations are only made correctly in the case of (13-20) and not (13-17)?

At that point, Physics is in trouble. It is my purpose in this paper to show, qualitatively at least, that the behavior of the Marinov motor can be explained in terms appropriate to (13-20) (direct, straight-line current element interaction), but that applying the means of (13-17) (Lorentz's field theory--what we're all taught in engineering physics class as undergrads) leads to a direct contradiction with what is observed in the laboratory.

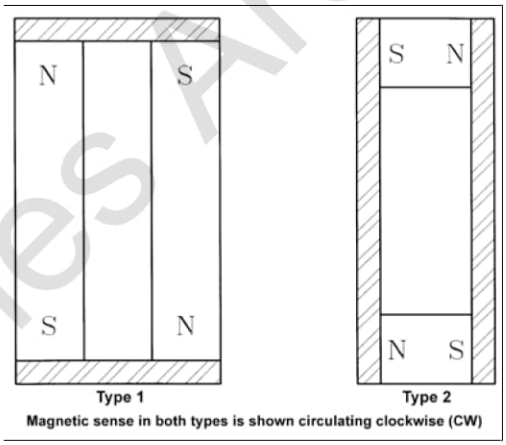

Figure 2. Toroids.

Though I will use no more math from this point on, we still need to do some homework. We need to all get on the same page and to understand what we're all talking about. I want this paper to show the way to additional experiments, and I want it to be accessible to all those garage and basement scientists out there who do not have a formal scientific education, who may not have even finished high school (in short, men like my late father), but who nevertheless can reason and experiment with the best of them, and find the way to the genuine laws of nature.

With this in mind, consult Figure 1. Here we see the "essential Marinov motor" as originally described by Wesley and as discussed in two previous papers by me and several by Phipps (3) (4) (5). The most important thing to note about this photo is that it has the expected rotation directions backwards from what I've often observed in my lab. We've noted this in our earlier papers. I think I understand why this happens and I think the reasons for it have little to do with "flux sense." Just looking at figure 1 suggests two easy ways to make your own toroids, and these are shown in figure 2. The first way is to use two bar magnets or stacks of powerful little magnets, in the vertical positions, and steel or iron keepers across the top and bottom to close the magnetic circuit. I call this a type 1 torus. The second easy way is to use short (or short stacks) of magnets at the top and the bottom, and close the magnetic circuit in this case with long steel or iron bars. In both cases as shown in the figure, the "flux sense" is clockwise. However, if you consult Figure 3, the two versions of toroids have different kinds of leakage fluxes, exactly reversed from each other.

This last is important. If flux direction inside the magnets was all that mattered, then it should make no differ-

New Energy Times Archive

ence which way the presumed leakage fields are pointing outside. Yet it does. Further complicating matters was the fact that the rotational torque applied on the toroids from the ring current didn't seem to be affected by the amount of leakage flux in the vicinity of the ring.

At the time my first paper appeared in IE #17, Phipps, Ligon, and I were all in a muddle over this, and I couldn't do much in the lab due to the arrival of my new son on January 16 (Joshua Christian Kooistra—he's doing great!). But recently I have been able to make it back into the basement for some serious work, and I think I've solved the matter.

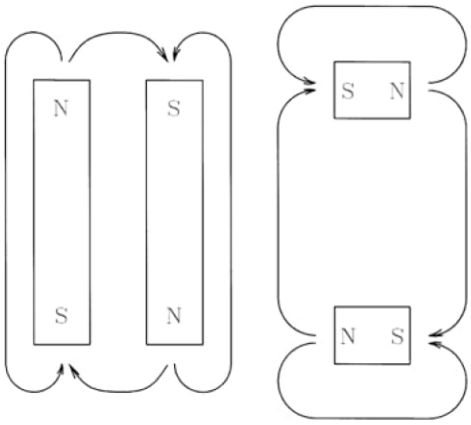

Figure 3. Expected Flux "Leakage."

I must point out again that I have not worked with other kinds of toroids. Putting two horseshoe magnets together is another good way to construct a torus, or you could just put a keeper on one horseshoe magnet and try that, or make a torus where you have magnets on both the vertical sides and the top and bottom. As will become clear below, this would have complicated my analysis a great deal. Also, I specifically *wanted* to work with toroids that had severe leakage, but that had it going in predictable ways, easily verifiable with compass and iron filings in a petri dish. (Since all the criticism leveled at the "oddness" of the Marinov motor revolves around "flux leakage" as the mechanism, I decided the easiest way to refute these arguments was by contradiction—find out what flux leakage predicts, supply lots of leakage, then show that Nature doesn't support flux as the mechanism.)

With these points in mind, we can look at Figure 4, which shows specifically what sort of rotations I got in my lab with my two types of toroids. To duplicate this work, you need potent rare earth magnets, the kind it's darn near impossible to separate by hand. If you've never messed around with such things, you're in for a treat--they're quite astonishing in their own right. At any rate, Figure 4 shows the ring rotation direction for both kinds of toroids, and it is to be understood that the torus twists the other way from it's initial position, until reaching the "lock" position one quarter-turn around.

Now, what made Wesley's claims in his paper so novel in the first place was his assertion that there was no magnetic field in

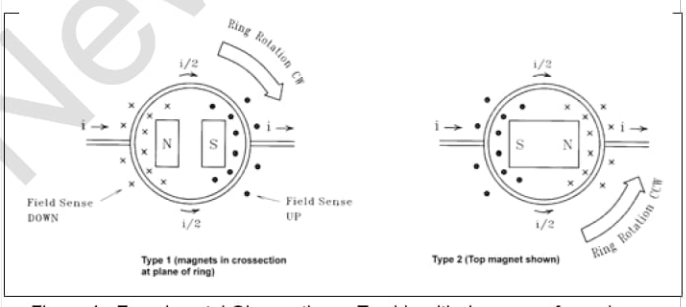

Figure 4. Experimental Observations. Toroids with rings seen from above.

the vicinity of the ring, period, and yet the ring would turn anyway, which is in flat contradiction to accepted theory. In fact, Wesley went on to model his toroid as two infinitely long solenoids, with which it is commonly accepted that the field outside such things is zero. Not having any infinitely long solenoids readily at hand, the experimenters among us resorted to the permanent magnet toroids, with which it was impossible to eliminate leakage completely.

Anyone who first comes to the Marinov motor tries to explain it in terms of what they're taught in physics class, and this means they resort to the "right hand rule" for forces exerted on current carrying wires by a magnetic field. If you're unfamiliar with this, the rule goes as follows: Point the thumb of your right hand in the direction of the traditional plus current, and point your fingers in the direction of the magnetic field, and the direction of the force exerted will be straight out of your palm.

Consulting Figure 5A, you see the direction of the expected forces exerted on the ring by the magnetic leakage from the type 1 torus. All of these forces are in opposition to each other, and they either seek to expand or compress the ring. There are no forces in conventional theory to act in the direction of the current, and so, no forces available to make the ring rotate.

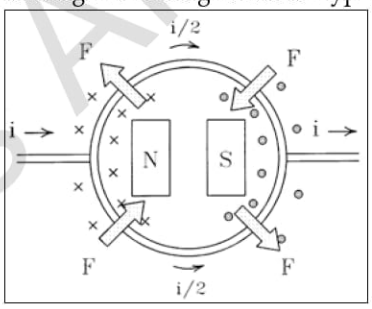

Figure 5A. Forces on Ring due to leakage.

This leads critics to immediately search for

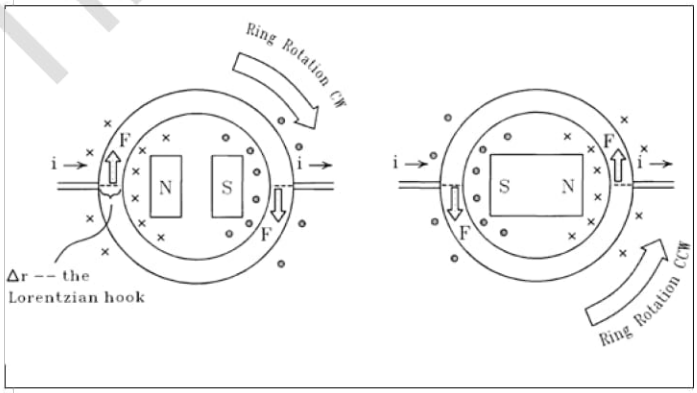

Figure 5B. Rotational Expectation via leakage flux analysis employing the Lorentzian hook.

what I call the "Lorentzian hook," some tiny piece of the conductor that might be carrying current at right angles to the force direction. Once such a hook is found, all of the force of motion is promptly hung upon it as the cause, and theory is saved for another day. In the case of the Marinov motor, the Lorentzian hook is asserted to be the tiny component of the current that flows from the outside to the inside of the ring. In Figure 5B we look at these components and, sure enough, they do provide a push in the observed direction. However, as I showed in the last issue of IE (4), the expected force from this particular hook should depend upon the radial width of the ring, but it doesn't. (Hookonians seldom seem to be deterred by actual magnitude of force considerations. Any old hook will do, it seems, and since all real objects are three dimensional, hooks are in ready supply.)

At this point, we are ready to consider our two sets of conventions for analyzing the Marinov motor. Figure 6 shows

New Energy Times Archive

two parallel wires with current flowing in the *same* direction, and it is an empirical fact that these wires will be attracted to each other. If currents flow in opposite directions, repulsion results. In the Ampere view that we'll be using, it is enough to just look at current pair directions and note whether or not these are attractive or repulsive. (Note: Dr. Peter Graneau (6) has explained at length that Ampere's actual formula predicts that current elements flowing in the same direction, like in the same wire, will actually be repulsive, and Phipps has conducted experiments that prove that the predicted force distributions shown in the circular figure are borne out (7). But the set of experiments I conducted would be largely unaffected by this aspect of Ampere's true force law, so we will proceed as if the "Ampere view" and the "field view" are just two different ways of looking at the same thing.)

The field view is as follows. One wire produces a magnetic field at the point of the other wire, and it is this field that the wire "senses" and responds to. To find this field we use another right-hand rule. You point your thumb in the direction of the traditional plus current, and the field sense curls around in the direction of your curled fingers. (This is all that Wangsness means when he talks about a current element and something *independent* of that element.)

To finish up with Figure 6, simply note that two bar magnets are in an attractive orientation when their field lines go in opposite directions and that bar magnets tend to line up with the N pole pointing in the direction of field sense. Finally, in the last picture, we see the Amperian conception of a permanent magnet. Using our right-hand rule for finding field sense with a current carrying wire, we curl our fingers into the magnet in the direction of the internal field and note which way our thumb is pointing, and this tells us the direction of the surface currents on the magnet. (These currents were invented long before a theory of the electron existed—they're not "real" in the same

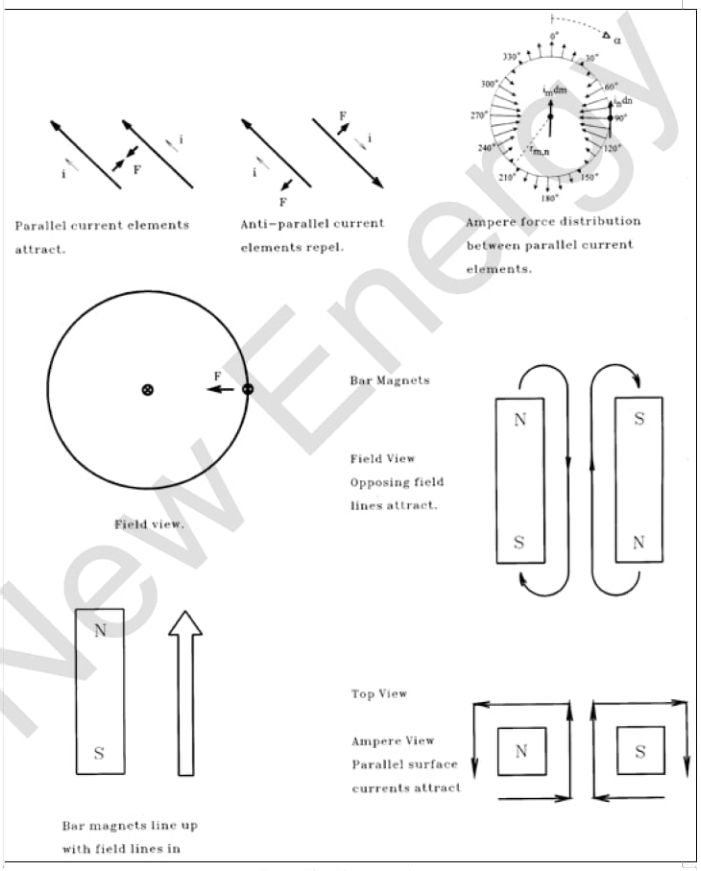

Figure 6. Conventions.

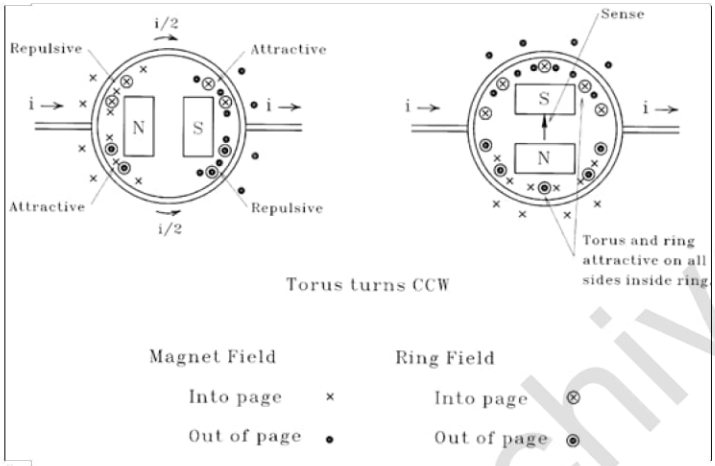

Figure 7. Torus motion via field analysis -- Type 1.

sense that currents in a wire connected to a battery are.) Note that just as with current carrying wires, surface currents flowing in the same direction are attractive.

We're now ready to analyze what we see with the Marinov motor using both of the approaches outlined above. The field method is obvious enough since that's what everyone is taught. We shall consider the current element approach to be the non-field method, or the action-at-a-distance approach (not that it needs to be genuine action-at-a-distance--other forms of field theory might work, just not the current one).

Figure 7 is a field analysis and shows the direction of rotation of the type 1 torus from its initial position to its "lock" position after one quarter turn. The little x's on the left side of the ring show the leakage field from the magnet going into the page, and the dots on the right show the field from the magnets pointing out of the page, as the fields are directed in the plane of the ring. The circled x's and dots show the field produced by the ring while current is flowing through it. It is easy enough to confirm that the leakage fields do measure up to expectation. I used both a small compass and iron filings in a petri dish and the "lines of force" are easy to see.

Notice that, initially, the fields in the upper left quarter of the picture point in the same direction and are thus repulsive. In the lower left quarter, the fields are in opposition and are thus attractive. This situation is just reversed on the right side. So the torus clearly is predisposed to rotate counter-clockwise, and does. (Note: I left out field lines produced by the ring but exterior to the ring since these are more spread out than the interior fields, and therefore weaker, and therefore not dominant.) For completeness, it must be noted that I have experimentally verified that when the magnets are fixed, the ring will rotate clockwise if free to do so. Therefore, the reaction forces in the ring/torus system are in fact between the ring and the torus, and not between the torus and the lead wires, as some have suggested. (For that matter, I've also brought lead wires in vertically, twisted them around, etc. They just don't contribute much to the motion of the torus, if anything.)

The second picture in Figure 7 shows the torus in its lock position, and we note that the fields interior to the ring are all in an attractive arrangement. Notice also that in this case, the magnetic "sense" is pointing from N to S.

So far, it looks OK for Lorentzian field theory, as long as we don't look to closely at just how it is that the torus is exerting force on the ring so that the ring can rotate. At least the field lines seem to show that what does in reality happen can be qualitatively predicted by looking at attractive and

New Energy Times Archive

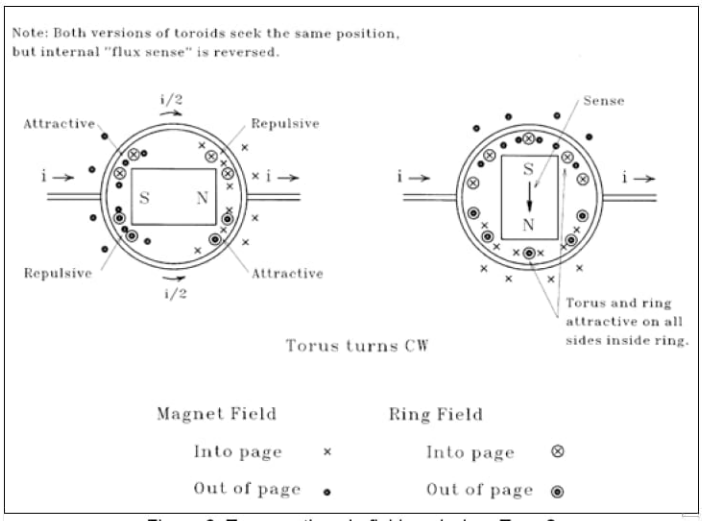

Figure 8. Torus motion via field analysis -- Type 2.

repulsive field line arrangements.

Figure 8 is much the same as Figure 7. But in this type 2 case, the leakage flux is reversed, and the torus rotates clockwise from its initial to its lock position. Once again in the lock position all of the forces are equally attractive, but now the flux sense is from S to N, reversed from that of type 1. So flux direction in the Wesley analysis doesn't play the part he thinks it does, or at least, not when one uses permanent magnets the way I have.

Figure 9 is the analysis of the type 1 torus using the current element approach. If you look at the current coming in on the left, it splits and heads straight up and down the page, so initially, the current components at the point of current

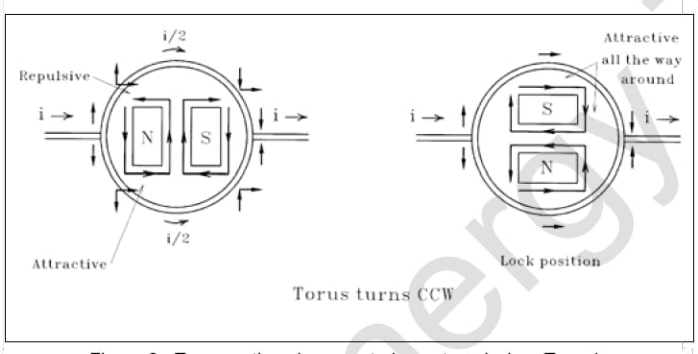

Figure 9. Torus motion via current element analysis -- Type 1.

entry are vertical. By the time the current gets ninety degrees around the circle, the components are entirely horizontal, and then entirely vertical again when the current gets all the way

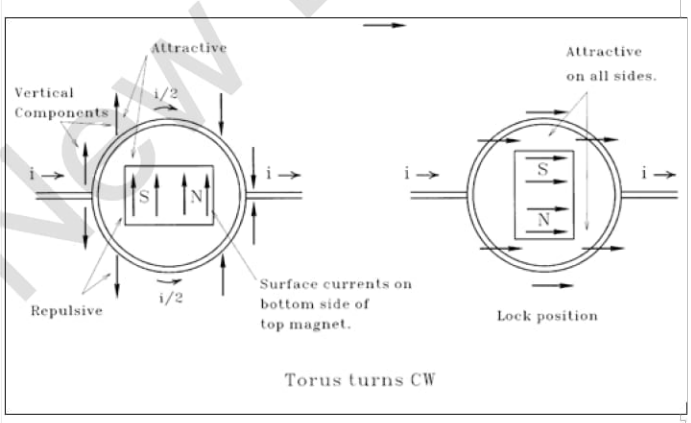

Figure 10. Torus motion via current element analysis -- Type 2.

around. In between these positions, the current is composed of both vertical and horizontal components. If we follow our convention that parallel current elements attract and anti-parallel repel, then it's easy to see in this case how the torus would rotate counter-clockwise initially. It is also easy to see how the torus remains in the lock position, since once again all forces are attractive at that position.

So far, so good. The field approach and the current element approach are yielding equivalent results, and since these have always been assumed to be equivalent ways of looking at the same thing, this is to be expected.

Figure 10 is a bit more difficult to explain. With the type 2 torus, I found it necessary to just forget about the vertical members of the torus altogether. The empirical reason for this is that if you connect a magnet to a piece of steel as one would do in making a torus of this kind (making half a torus) and then try to pick up a nail, the magnetic attraction at the end of the piece of steel is much reduced from that if you touched the nail to the magnet itself. Since a lot of the field clearly "leaks" through the steel, it is not clear what it is that a permanent magnet will do when attached to a piece of steel in terms of generating surface currents. Since I have made working motors that have no vertical members at all, it seems to me that when using powerful permanent magnets, the "seat of power" resides primarily in the magnets, and the rest of the torus can chiefly be ignored.

Back to Figure 10. In this explanation, one looks only at the surface currents on the top and bottom magnets, and then only at the currents in closest proximity to the ring. Hence, the leftmost illustration in Figure 10 shows the sense of the surface current on the *bottom* of the top magnet, since this is closest to the ring. (Recall that even in the field case, we looked at the field interactions on the inside of the ring, and ignored those on the outside since these are the farthest away and so do not dominate.) The rotation follows directly from our conventions, and once again, in the lock position, forces are attractive on all sides.

So at this point, qualitatively, our two ways of looking at things, field view and Ampere view, seem to conform equally well to what we see in the lab. But bear in mind, the current element approach talks about two current elements interacting simultaneously with each other, and the field approach says, if say we look at two wires: Wire A produces a field at the point of wire B and this makes wire B feel a force toward wire A, and also, wire B produces a field at the point of wire A and this makes wire A feel a force toward wire B. This means that when looking at the Marinov motor, we have to consider how the field produced by the ring affects the torus separately from how the leakage fields from the torus affect the motion of the ring.

Figure 11 details three instances where the Ampere current element approach works and the Lorentzian field approach fails.

Figure 11a shows that when the radial part of the ring is reduced to zero, the force on the ring (now shell) does not go zero. The force going to zero is predicted from the Lorentzian approach, but is not to be expected from an Amperian one. We see in the lab that Ampere prevails.

Figure 11b shows the brushes brought into contact with the ring from the *inside*. This reverses the supposed Lorentzian hook, and so the prediction in this case is that brushes to the inside of the ring should result in a reversal of rotation direction. The Ampere approach predicts no change in rotation direction. Again, in the lab, Ampere prevails.

Figure 11c deals with a specifically built short, leaky

New Energy Times Archive

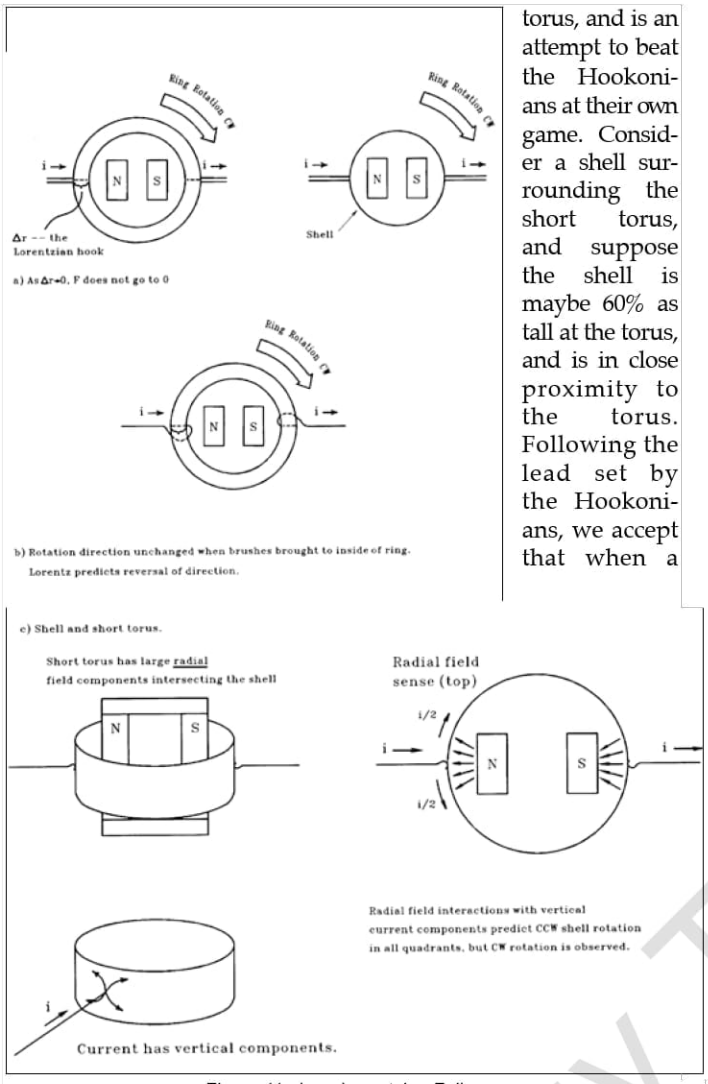

Figure 11a,b,c. Lorentzian Failures.

current flows into a shell, it spreads out up and down as well as flowing around the ring (we can prove this by finding the voltage drops between any two points on the shell). Given the geometry of the leakage fields from the torus with respect to the shell, we can conclude that most of the field that interacts with the currents in the shell is radial. Hence, if we follow a field line from the N pole on top to the left, it would first pass through the shell on the way out, and interact with an "up" current element, then come back in through the shell on the bottom, and interact with a "down" element of the current.

In every quadrant, the force prediction from the Lorentzian right hand rule is that the force on the ring should make the ring go counter-clockwise. The Ampere prediction is for a clockwise rotation. Again, in the lab, Ampere prevails.

In my mind, there is no longer any doubt that the Lorentz force is inadequate to explain all forces between current carrying conductors. It works most of the time, but the complete picture requires the Lorentz force plus an additional term.

Responses to my previous articles have been illuminating. Oftentimes people suggest explanations for how the Marinov motor is really obeying the conventional expectations for the Lorentz force. Most of these explanations would never be considered if those supplying the explanation had ever built one of their own motors.

For the home experimenter, I would strongly suggest that the way to get started with experimenting with motors of this type torus, and is an attempt to beat the Hookonians at their own game. Consider a shell surrounding the short torus, and suppose the shell is maybe 60% as tall at the torus, and is in close proximity to the torus. Following the lead set by the Hookonians, we accept that when a is to get yourself some powerful rare earth magnets. Small ones that can be stacked work nicely, and allow for making a wide variety of toroids easily. Do not try to build a ring rotator first. Get your feet wet by hanging a simple torus from a thread and put a ring around it. Only in this way can you get a "feel" for the forces involved. Do not worry too much about trying to make your tours "leak-proof." My own experiments have shown that leakage B-field isn't responsible for the Marinov motor effect anyway. Experiment with shells, with multiple-ring stacks, with combinations. Try different kinds of toroids--it should be fairly easy to come up with a toroid geometry that refuses to budge at all--try to find one. If you're really ambitious, that little trick with the Ampere forces being repulsive for collinear current elements suggests that some toroids might go backwards if one just changes the separation of the elements a little bit. Try to find such a geometry.

As for me, I'm messing around with motors that have no toroids at all, and exploiting that propulsive force that drives the magnets from the initial to the lock position. If one gets the torus going, then cuts the power, inertia will carry the torus along. If one applies reversed current at the proper instant, the torus will get an additional kick as it rotates around. Right now I have the simplest 1000 rpm motor in the world in my basement, using a wooden dowel as a shaft. 1000 rpm. Not bad for a motor that shouldn't work at all.

Acknowledgement
Illustrations by Tom Ligon (TomLigon@Compuserve.com)

References

1. R. Wangsness, *Electromagnetic Fields*, 2nd ed., John Wiley & Sons, New York, 1986.
2. Wangsness, pg. 223.
3. J. Kooistra, "The Marinov Motor--A Brief History of Mine", *Infinite Energy*, vol. 3, no. 17, 1998.
4. J. Kooistra, "The Marinov Motor is Not a Homopolar Motor", *Infinite Energy*, vol. 3, no. 18, 1998.
5. T. E. Phipps Jr., "Demystifying the Marinov Motor", *Infinite Energy*, vol. 3. no. 17, 1998.
6. P. Graneau, N. Graneau, *Newtonian Electrodynamics*, World Scientific, New Jersey, 1996.
7. T. E. Phipps Jr., "Report on VACE Experiments", Galilean Electro dynamics, (to be published in 1998).

Aspden Patent continued from page 51

adsorbing deuterons into a host metal in which they become separate from their satellite electrons and by concentrating the loading by the deuteron population.

Thirdly, as with the creation of stars and by hydrogen fusion, there is the need to provide the field which pulls the deuterons together in spite of their mutual repulsion. In cold fusion this means the provision of a neutralizing negative charge distribution within the metal body of host metal. This requires strong electron current surges resulting in heat concentrations which set up temperature gradients in company with transverse magnetic fields. However, the structural form of the host metal in relation to the current channel, the magnetic field effect and the heat conduction path require a mutually orthogonal geometry to provide an optimum action.

Note that the surplus negative charge may result in a charge density that is quite small in relation to the positive charge of the deuteron population but every unit of charge is seated in a discrete electron and a single electron which can upset the normal charge balance of deuterons and free conduction electrons can nucleate a pair of deuterons.

Then, the creation of a proton in one deuteron accompanied by the demise of a proton in the other will convert the two deuterons into a tritium nucleus and free a proton with a beta particle transferring between the two. Alternatively one deuteron will convert into helium 3 and the proton released will be in company with a beta minus particle.

The onward reactions involving neutrons that are observed with hot fusion processes need not occur if the events involved are triggered naturally by the mu-meson activity in trying to create protons rather than by neutron bombardment.

The Proton Creation Probability

This probability of proton creation is a calculable quantity in terms of the

Aspden Patent continues on page 82

New Energy Times Archive

Motor-in-a-Wheel: An Application of the Marinov Motor

Thomas E. Phipps, Jr.
908 South Busey Avenue
Urbana, Illinois 61801

Introduction

Readers of this magazine are privileged to have got the jump on the technical community through early awareness[1,2] of the "Marinov motor" – a new type of electric motor (or generator) that seems to demand reappraisal of the electromagnetic (EM) force law to explain its working. Controversy can be expected to continue to swirl around this new development, as any claim of something new in the EM force law area affronts both established electrical engineers and theoretical physicists. The latter feel particularly threatened because the great card-house of relativism, and related elementary particle theory (based on mathematical covariance), is placed in danger by any unexpected physical discovery affecting at first order the Maxwellian rock on which their church is founded.

Enjoyable as the associated theoretical disputations may be in their own right, there is also a real world in which new technical discoveries can make a contribution to human well-being, or otherwise – as human fate, folly, and industry may determine. In the present paper I am going to ignore the controversies and explore the possibility that the Marinov motor concept can make a real-world contribution. To make this exercise maximally instructive, we shall aim at a specific application – a motor in an automobile wheel. The analysis will not assume that the reader knows how to do the necessary calculations, but will spell out the general theory in sufficiently self-contained detail that this and other future applications can be given analogous practical embodiments by any mathematically trained engineer. In other words, the motor-in-a-wheel application is chosen arbitrarily to illustrate *reduction to practice* of the new motor principles and force law. It may be a tactical error to rush ahead in this manner before the last theorist has withdrawn the last theoretical objection. Or, it may not … as none of us lives forever.

Historical Review

We begin with a quick summary of some recent history. Stefan Marinov, the well-known Austro-Bulgarian quasi-mad physicist, had many original and mostly wrong ideas about EM. These led him to reject the conservation of energy and angular momentum. (What would you expect? … his delusions, like those of more orthodox authorities, included taking seriously as physics the Newton's-third-law-disobeying aspects of the Lorentz force law.) More importantly, he invented several new kinds of electrical machines. Some of these were supposed to run as perpetuum mobilia, but somehow never did – including one he called "Siberian Coliu," with which we shall be concerned here.

I have just alluded to the public-relations side of Marinov, omitting the more lurid aspects such as his protracted badgering of an editor of *Nature* that led to "publication" of some of his ideas as a paid ad in that august journal (thus proving it possible to buy one's way around the refereeing system), his repeated threats of self-immolation in response to rejections of his papers, etc. There is also a human side that must be considered genuinely tragic, in that he ended by renouncing all his heresies and joining the church of Maxwellian orthodoxy just before killing himself last July. There is a bitterness to that fact that should spoil any taste of victory for the physics Establishment … as well as a plenitude of irony. For no sooner had Marinov taken this irreversible action than a number of people began independently to acquire an eerie sort of fascination with his motor. This interest had nothing to do with any reversion to Maxwellian orthodoxy. Quite the contrary. I venture to predict that Marinov's motor will ultimately have much the earthquake impact on EM theory (and on the rest of physics) that Marinov originally anticipated … although the new theoretical paradigms arising from it are not likely to be his.

Marinov himself found support[4] for many of his ideas concerning the shortcomings of EM theory in experiments earlier done by Genadi Nicolaev at Tomsk and in a 1986 monograph in Russian by that author. Indeed he shows [p. 41, Fig. 20 of Ref. 4] a diagram of an experiment, done by Nicolaev with wire conductors, that looks exactly like what we here identify as the Marinov motor. It does not use permanent magnets.

The next major actor in this brief history is J. P. Wesley, an American expatriate physicist now living in Germany. He played a key part by providing a drastically simplified dia-

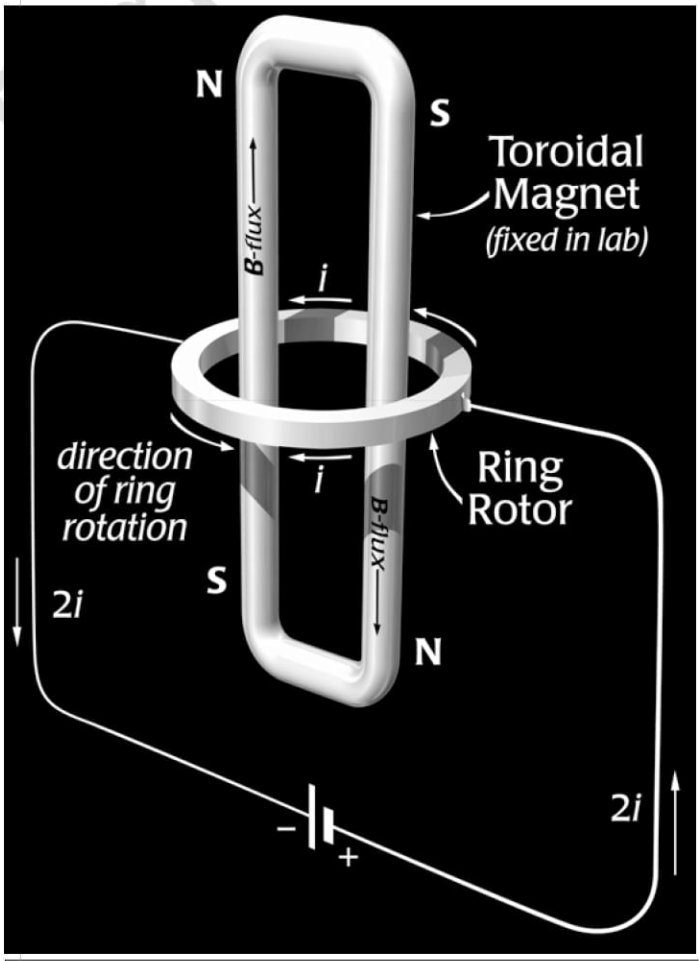

Fig. 1. A representation of the essential elements of the Marinov motor, based on Wesley's depiction, Fig. 1 of Ref. 3. The indicated toroidal permanent magnet can be replaced conceptually by a pair of oppositely-oriented vertical infinite solenoids. The sense of ring rotation indicated is that which has been observed for the case of permanent magnets used as vertical members of the toroid.

New Energy Times Archive

gram[3] (siimilar to Fig. 1, with some sign differences) and torque analysis of "the Marinov motor" (as he called it, and I follow suit), so that its essential weirdness could be grasped by any physicist. In Wesley's idealized configuration the permanent magnets used by Marinov are conceptually replaced by two vertical, oppositely-oriented solenoids, each of infinite length and infinitesimal cross section. These are symmetrically encircled, without contact, by a horizontal conducting ring (supported in bearings not shown), into which direct current is introduced through brushes that allow ring rotation. The current lead-in, lead-out brushes lie in the same vertical plane that contains the solenoids. Current flows, the ring turns.

The question for physicists is how such a ring could possibly rotate: There is no "contact" of the magnetic **B**-field with the current-carrying ring, because (ideally) the field is entirely contained within the infinite solenoids – which could be joined "at infinity" to form a flux-containing toroid, as shown in Fig. 1 for a finite toroid. Maxwell's theory teaches that there is no action at a distance … thus with no contact between the magnetic field and the current-carrying ring there should be no interaction – certainly no ponderomotive force to drive ring rotation. And this negative prediction is backed by the sacred Lorentz force law, which says wherever the **E** and **B** fields vanish there must be zero force. Yet in the permanent-magnet analog of this setup numerous observers have seen the ring turn. Is this magic? What is magic and what is physics? Experimentalists have objective means of answering, but for theorists the difference lies solely in what the mind is prepared to believe. Faraday may have been among the last physicists whose mind was not conditioned to believe only what it was taught.

In addition to clarifying just what Marinov had invented, Wesley gave a quantitative analysis showing one way in which EM theory could be modified to accommodate the observations. He pointed[3,5] to a new use of the vector potential **A** of classical theory. (Actually, Maxwell in his *Treatise* used the potentials. It was Heaviside who banished them from "field theory.") A feature of the vector potential is that it is not confined to the interior of magnets or solenoids, but reaches out into space and thus can "contact" the ring and interact with its current. In the traditional definition of electric field, $\mathbf{E} = -\nabla\phi - \partial\mathbf{A}/\partial t$ in terms of the potentials $(\phi, \mathbf{A})$, Wesley[3] proposed replacing the partial time derivative $\partial/\partial t$ by a total $d/dt = \partial/\partial t + \mathbf{v}_d \cdot \nabla$, time derivative, defined as where "$\mathbf{v}_d$" (assumed constant) can be considered to describe convection by the current electrons drifting at speed $-\mathbf{v} = \mathbf{v}_d$ in the ring (where **v**, obeying $q\mathbf{v}=i\mathbf{ds}$, is the velocity of a fictitious plus charge q in the direction of conventional plus current flow $i\mathbf{ds}$). In other words, it is as if a "detector" of the **A**-potential generated by the solenoids were moving with the electrons and through this convective motion were sensing a new force $-(\mathbf{v}_d \cdot \nabla)\mathbf{A}$ per unit charge (the minus being intrinsic to the definition of **E**). This force acts electromotively upon the ring current and, through force transference to the lattice ions (admittedly not well understood physically), acts ponderomotively on the ring itself. Another way of saying it is that the electrons of the ring current serve as "test charges" capable of responding to a new-found "potential-gradient" kind of electric force. Or, one could say, with few hypotheses, that metallic "current elements" are acted upon by **A** directly. The replacement for the Lorentz force law is

$$\mathbf{F} = q\mathbf{E} = q(-\nabla\phi - d\mathbf{A}/dt) = q(-\nabla\phi - \partial\mathbf{A}/\partial t - (\mathbf{v}_d \cdot \nabla)\mathbf{A}) \qquad (1)$$

the last of these terms being the force that drives the Marinov motor. A way of deriving result (1) from basic principles of first-order invariance has been discussed previously [2].

Although it is aside from my present subject, the reader might like to do a bit of what the late Sen. Vandenberg called "vivid contemplation" concerning the impact of an extra force term of the form $-(\mathbf{v}_d \cdot \nabla)\mathbf{A}$ upon the discipline known as *plasma physics*. By a vector identity[2] this can be written as $-(\mathbf{v}\cdot\nabla)\mathbf{A} = \mathbf{v}\times(\nabla\times\mathbf{A}) - \nabla(\mathbf{v}\cdot\mathbf{A})$, provided $\mathbf{v}_d$ is constant. The first term on the right describes the Lorentz force. So that is included. The last term is a stranger. It vanishes when integrated around a closed circuit or if the vectors $\mathbf{v}_d$ and **A** are mutually perpendicular. But in a plasma the motions of charges are chaotic, so neither of these conditions is satisfied. It is evident that $-\nabla(\mathbf{v}_d \cdot \mathbf{A})$ averaged over all directions, will produce no net translatory effects … but what about effects on plasma diffusion rates?

It is natural to ask what sort of detector responds to "potential" forces. This is where new thinking is required. The answer must amount to a tautology: The Marinov motor is itself the first detector to respond to such forces. Well, not quite. Let's say it is the first known object (classical "instrument") that acts as a macroscopic detector. Before that, there was, supposedly at the quantum level, something known as the "Aharonov-Bohm effect," which is in thought nothing but a miniature Marinov motor – with one solenoid instead of two, encircled by a current-carrying "ring" consisting of two "parts" of an electron. This startled everyone at the time of its advent, but physicists in their adorable minimum-effort way were able to avoid thinking new thoughts by viewing it as "just another quantum effect" and sweeping it under the rug. Wesley[5] has challenged this received view. He maintains that the effect is of a classical origin.

To bring the history of this subject up to date, experimenters in this country learned of the simple torque formula provided by Wesley's analysis and acted to test it. The first was T. Ligon,

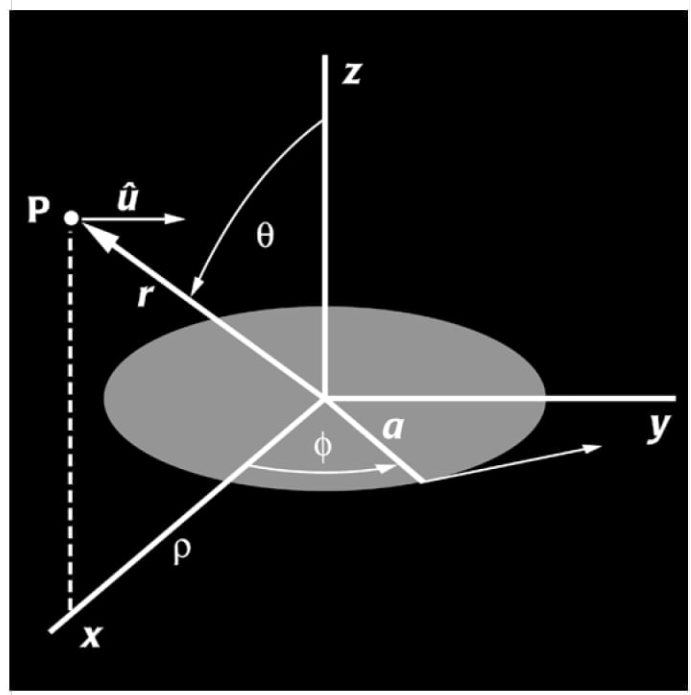

Fig. 2. Geometry for analysis of vector potential produced at point P by CCW flow of conventional plus current in a circular ring of small radius *a* (adapted from Ref. 8, Fig. 5.5).

New Energy Times Archive

who had the sensible idea of avoiding the complication of brushes by fixing the ring in the lab and suspending by a torsion fiber the "armature" (a term referring to Wesley's solenoids, replaced by a vertically elongated magnetic toroid). Thus the exertion of torque when current was turned on was readily verified through observable turning of the toroid. In independent experiments, J. D. Kooistra confirmed the original Marinov effect with fixed-magnet stator – the ring turning when brushes are used as in Fig. 1. He also went a long way toward experimentally excluding the hypothesis that **B**-field "flux leakage" from the permanent magnet toroid could explain the turning via the Lorentz force law. The latter would have to act upon radial components of current flow in the ring in order to account for azimuthal force exertion. Kooistra demonstrated the inadequacy of such a proposed mechanism by replacing the conductive ring with a ring-sleeve of aluminum foil of very small radial thickness. He observed no substantial torque diminution. Thus the picture of *radial* current flow conjoined with "flux leakage" as the mechanism of turning was rendered implausible. To the same degree the Lorentz force law as be-all and end-all loses credibility.

Finally, the present writer, following Ligon, used a magnetic toroid "armature" suspended in a torsion balance, with fixed-ring geometry, to make calibrated observations of torque that quantitatively confirmed[6] Wesley's formula, within a margin of experimental error. Moreover, on the side of theory, I had earlier asserted [7] the importance of a total time derivative term $d\mathbf{A}/dt$ in the **E**-field definition, as necessitated by *first-order invariance* requirements of the EM equations under first-order inertial (Galilean) transformations. I confess, however, that I had not made the obvious extrapolation to the existence of an extra first-order term in the force law, and so had not been so clever as Marinov in grasping the possibilities. [Marinov[4] understood the importance of $d\mathbf{A}/dt$, but for some reason did not correctly identify the extra force law term, as above, but instead took it to be $-(\mathbf{v}_d \cdot \nabla)\mathbf{A}$, which is not right, since the divergence of **A** is probably not an operationally definable quantity. It can be considered to enter an invariant relation formally resembling an "equation of continuity," $\nabla \cdot \mathbf{A} + d\phi/dt = 0$. Such an assertion of continuity expresses conservation … but what is the physical "substance" that is being conserved here? A similar question could be asked about the potentials in conventional EM theory. Historically, the first act of physicists was to leach all the physics out of Maxwell's equations; and nobody since has bothered to put any back in.]

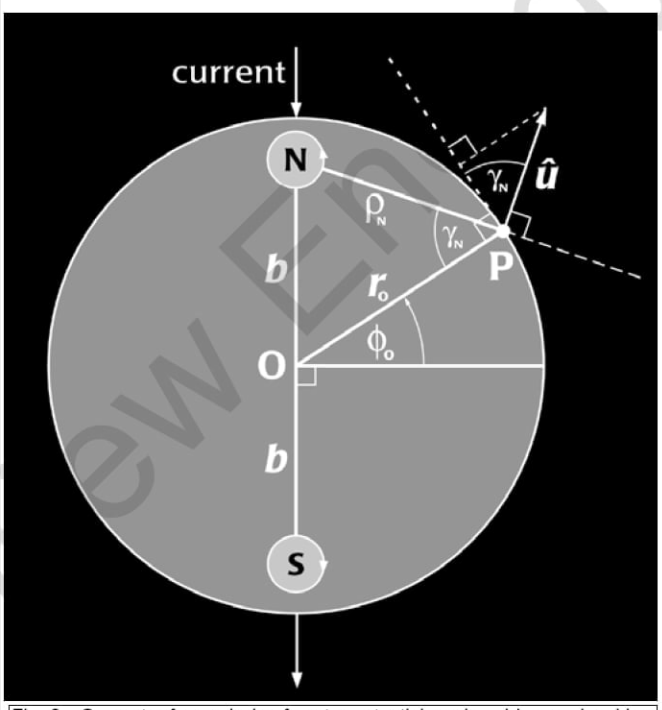

Fig. 3. Geometry for analysis of vector potential produced by a solenoid or magent of infinitesimal cross sectional area with north pole up, acting upon an arbitrary point P on the ring of an idealized Marinov motor, top view.

This largely brings us up to date. Ligon has demonstrated torque increase by the use of multiple rings wired electrically in series. This is crucial for reduction of the theory to useful practice, for the torque exerted on any single ring is too weak for practical application – just as a single-turn armature or stator would be of no interest in the design of conventional electric motors. Kooistra continues to discover ingenious experimental proofs of the irrelevancy of "flux leakage." I have built a small continuously rotating motor that demonstrates some of the principles whose application will be treated here.

In a sense the main importance of the Marinov motor may be judged to lie in what it will do in the *long term* to EM theory and to theoretical physics in general. In a word, the devastation will be almost total, since any stipulation of first-order invariance via d/dt must destroy *spacetime symmetry* at its source in the EM field equations (total time derivatives being not mathematically symmetrical with partial space derivatives). But here we wish to move on from all that to show how the new motor principle can be applied in multi-ring configurations to yield quite respectable torque, sufficient to make this motor possibly competitive with more conventional types. For I have a feeling that the only way to ensure that physicists do not wholly ignore this development (it being laughable to dream of reporting it in the journals they read) is for it to engender commercially viable devices that command widespread attention. There ought to be no connection whatever between the quality of abstract physical theory and the level of public scrutiny, of course … but in my old age I have become cynical about such matters.

It may be confidently anticipated that professional electrical engineers, adept in conventional electric motor design and comfortable with it, will greet the practical potentialities of the Marinov motor with as high a level of scorn as that with which professional physicists greet the accompanying theory. Professions do that to people. To such practitioners I can only say: You are pitting a mature technology, a 500-lb gorilla, against an infant barely out of its swaddling equations. If you regard the long-term well-being of our species, show mercy in your judgment and try to discern the more distant possibilities. Having said this, though, let me add that I invite and would eagerly welcome rival approaches based on more conventional methods of electric motor design. Comparative studies would have great educational value.

To illustrate Marinov motor principles, then, I shall choose to sketch the design of a *motor in an automobile wheel* … simply because this appeals to me as a socially useful application. (Why should one want to put motors directly into the wheels of vehicles? For full-time four-wheel drive, for elimination of power-transmission inefficiencies, for energy recovery on braking, and for such possible cute performance amenities as the ability to move sideways at 90 degrees into a parking place – if the wheel is mounted, *e.g.*, in a bicycle-fork type of suspension.) I shall limit myself to a rather detailed analysis of *torque*, to show that a very simple physical design, without gears or other extensive mechanical complications, can suffice to meet the torque requirements of a practical motor. This is of course an immensely long way from a full system design. But I hope it will prove suggestive and stimulating … enough to help bestir engineering practice that, once aroused, – as so often in the past

New Energy Times Archive

– can hardly be prevented from outstripping the "leadership" provided by physical theory.

General Analysis

We need to learn first how to move on from the idealized Wesley case of infinite-length solenoids of infinitesimal cross section to the less idealized case of finite-length solenoids or magnets of infinitesimal cross section. When we know how to do that, we can treat the case of *arbitrary finite magnet cross section* by integration. Thus an infinitesimal Amperian "current whorl" or circular solenoid shape can be deformed into a two-dimensional area-integration element, so the effects of many adjacent current whorls in a transverse slice across a magnet can be summed by ordinary integration and must amount formally to the same net result as a fictitious surface current circulating around the periphery of the cross section, as proven in many elementary physics texts. The area (double) integration is apt to be easier to handle than the peripheral line integration.

Elsewhere[6] I have treated the case of integrating the infinite-length infinitesimal solenoids to describe an infinite-length magnet of finite cross section. Here, since we wish to avoid the unrealism of an infinite-length magnet, it is simpler to do the analysis from a fresh start, deducing the infinite-length case as the limit of a finite magnet. Rather than beginning literally from scratch, we shall take as our starting point a formula borrowed from the physics literature[8] for the vector potential at observation point P produced by current I in a ring of radius a, such that $a \ll r$, where r is the distance of P from the center of the ring. Fig. 2 shows the assumed geometry. In this approximation Jackson[8] gives the magnitude of the potential vector, which points in the azimuthal (ϕ) direction at P, (the assumed direction of positive conventional current), as

$$A_\phi = \frac{I\pi a^2}{c}\frac{r\sin\theta}{\left(a^2+r^2+2ar\sin\theta\right)^{3/2}} \quad . \tag{2}$$

This is for a single circle of current. We want to treat the case of a finite-height solenoid or permanent magnet, so we must picture a vertical stack of (real or virtual) current circles of the type shown in Fig. 2. This means integrating in the vertical z-direction, for which purpose it is convenient to introduce cylindrical coordinates $\rho = r\sin\theta$ and $z^2 = r^2 - \rho^2$. Also we can substitute for the one-circle current I the current η per unit height of the solenoid, and for πa^2 the infinitesimal cross sectional area of the solenoid, δA. The constant c can be eliminated by suitable choice of units. Then Eq. (2) becomes

$$A_\phi = \eta\delta A\frac{\rho}{\left[(a+\rho)^2+z^2\right]^{3/2}} \quad . \tag{3}$$

We shall take the observation point P at the zero-level of coordinate z and add up the effects of our vertical stack of current circles (or Amperian surface magnetization current sheet or surface "magnetic polarization" on a permanent magnet) by integrating from finite value $z = -\alpha_o$ to $z = \beta_o$. Thus

$$Integral = \int_{-\alpha_o}^{\beta_o}\frac{\rho dz}{\left[(a+\rho)^2+z^2\right]^{3/2}} = \left[\frac{\rho z}{(a+\rho)^2\sqrt{(a+\rho)^2+z^2}}\right]_{z=-\alpha_o}^{z=\beta_o} \quad . \tag{4}$$

In the limit a→0 of the infinitesimal-area solenoid this becomes

$$Integral = \frac{1}{\rho}\left(\frac{\beta_o}{\sqrt{\beta_o^2+\rho^2}}+\frac{\alpha_o}{\sqrt{\alpha_o^2+\rho^2}}\right) \quad . \tag{5}$$

The integral (5) is proportional to the magnitude of the vector potential produced at P by the solenoid of total length $\alpha_o+\beta_o$. This vector has the direction of increasing ϕ in Fig. 2. It can be represented by a unit vector $\hat{\mathbf{u}}$ at point P, pointing normal to the plane (x,z) in the positive y direction. The shortest distance from P to the solenoid is ρ. Now consider the situation depicted in Fig. 3. The enclosing circle of radius r_o represents the "ring" of our Marinov motor. The observation point P, where we wish to evaluate the ring "driving" component of vector potential tangential to the circle, considered positive in the CCW direction of increasing coordinate ϕ_o, is located at an arbitrary azimuth OP. In the figure, two similar cylindrical solenoids of finite height and infinitesimal cross sectional area δA are shown inside the ring, marked N for north pole up and S for south pole up. These two are symmetrically placed with respect to the center point of the ring, being located on a diameter of the circle, each at radius $b < r_o$. The diameter in question is that at which current is brought into and out of the ring. The normal to this diameter at center point O marks the azimuth from which ϕ_o is measured.

Let us consider the value of the vector potential produced at P by the "N" solenoid. (CCW circulation of conventional positive solenoid current, as seen from above, corresponds to north pole N up.) Referring to Fig. 3, from the law of cosines applied to the triangle NOP, we have

$$b^2 = \rho_N^2 + r_o^2 - 2r_o\rho_N\cos\gamma_N \quad \text{or} \quad \cos\gamma_N = \frac{r_o^2 - b^2 + \rho_N}{2r_o\rho_N} \tag{6}$$

Observe from the figure that the vector potential produced at P by solenoid N points in the direction of the unit vector $\hat{\mathbf{u}}$ normal to the line segment NP. The angle adjacent to this unit vector is equal to γ_N, the same as the other γ_N angle interior to the NOP triangle, because one side of it is the tangent to the ring at P, hence normal to OP, and the other side is normal to NP, so the included angles are the same, as indicated. The projection of $\hat{\mathbf{u}}$ on the tangent to the circle is therefore $\cos\gamma_N$. From (3), (5) and our evaluation of $\cos\gamma_N$ in (6), we get for the component of vector potential that acts upon the ring to move it azimuthally in the CCW direction,

$$A_{\phi,N}(\phi_o) = \eta\delta A\frac{\left(r_o^2 - b^2 + \rho_N^2\right)}{2r_o\rho_N^2}\left[\frac{\beta_o}{\sqrt{\beta_o^2+\rho_N^2}}+\frac{\alpha_o}{\sqrt{\alpha_o^2+\rho_N^2}}\right] . \tag{7}$$

By applying the law of cosines to triangle NOP in a different way, we have

$$\rho_N^2 = r_o^2 + b^2 - 2r_o b\cos(90^o - \phi_o) = r_o^2 + b^2 - 2r_o b\sin\phi_o , \tag{8}$$

which permits some simplification of (7). The effect of the other solenoid S, is additive and is the same as that of N but with a minus sign and with subscript S for N, where

$\rho_S^2 = r_o^2 + b^2 + 2r_o b\sin\phi_o$. Let $u = \sin\phi_o$,

$g(w) = \alpha_o / \sqrt{\alpha_o^2 + w} + \beta_o / \sqrt{\beta_o^2 + w}$,

$h(u) = \rho_N^2 = r_o^2 + b^2 - 2r_o bu$,

$h(-u) = \rho_S^2 = r_o^2 + b^2 + 2r_o bu$. Then we can express the total azimuthal component of the vector potential at P as

$$\begin{aligned} A_{\phi,tot}(\phi_o) &= A_{\phi,N}(\phi_o) - A_{\phi,S}(\phi_o) \\ &= G(u) = \eta\delta A\left[\frac{(r_o - bu)}{h(u)}g(h(u)) - \frac{(r_o + bu)}{h(-u)}g(h(-u))\right] = -G(-u), \end{aligned} \tag{9}$$

New Energy Times Archive

which shows the symmetry property that a sign change of u changes the sign of $G(u)$.

This is our final result, applicable to magnets or solenoids truncated at distance α_o below the plane of the ring and distance β_o above it. (Keep in mind that α_o, β_o are lengths, measured in cm, not angles.) Let us check this against the infinite-length solenoid result obtained by Wesley[2]. Letting α_o, β_o each go to infinity, we see that $g(w)$ goes to 2 for every w. We then get for $A_{\phi_o tot}(\phi_o)$, with u and h written out,

$$2\eta\delta A\left(\frac{r_o - b\sin\phi_o}{r_o^2 + b^2 - 2r_o b\sin\phi_o} - \frac{r_o + b\sin\phi_o}{r_o^2 + b^2 + 2r_o b\sin\phi_o}\right) = \frac{4\eta\delta A b\left(r_o^2 - b^2\right)\sin\phi_o}{\left(r_o^2 + b^2\right)^2 - 4r_o^2 b^2 \sin^2\phi_o} \qquad (10)$$

This will be recognized as the same result obtained by Wesley [Ref. 3, Eq. (13)] if his 2K is identified with our $4\eta\delta A$. His 2K is $4\eta\pi a^2/c^2$, so we have agreement in view of our disregarding factors of c. His 2K can also be written as $B_o\delta A/\pi$, where B_o is the magnetic flux density within the magnet or solenoid in gauss. To describe a permanent magnet, our 4η should thus be replaced by B_o/π. If we measure **B**-field in gauss, current in abamps (1 abamp = 10 amps), and lengths in cm, then forces come out in dynes, torques in dyne-cm, etc. Since it yields the correct infinite solenoid limit, we may have some confidence in our expression for the truncated solenoid or magnet, Eq. (9).

Following Wesley[3], we make use of the last force term in Eq. (1), $-q(\mathbf{v}_d \cdot \nabla)\mathbf{A}$, $-q\mathbf{v}_d = q\mathbf{v} = i\,d\mathbf{s} = (i_{amp}/10)d\mathbf{s}$ for the ring current. The minus sign comes from the fact that the direction of convection $\mathbf{v}_d$ is that of electron motion, opposite in sense to the conventional plus (fictitious or Benjamin Franklin) current direction of **v** or **ds**. The ring force thus becomes . We recognize that for azimuthally directed force $\mathbf{A} \to A_{\phi_o}(\phi_o)$

and $d\mathbf{s}\,\nabla \to d\phi_o(\partial/\partial\phi_o)$,

and thus obtain for the force on a portion of the ring between arbitrary azimuths $\phi_o = \varphi_1$ and $\phi_o = \varphi_2$ (provided current flows unidirectionally within that portion, CCW flow being counted as positive)

$$(10/i_{amp})\delta F_{1\phi_o}(\varphi_1, \varphi_2) = \int_{\varphi_1}^{\varphi_2} (\mathbf{ds}\cdot\nabla)\mathbf{A} = \int_{\varphi_1}^{\varphi_2} \left(\partial A_{\phi_o}(\phi_o)/\partial\phi_o\right) d\phi_o = A_{\phi_o}(\varphi_2) - A_{\phi_o}(\varphi_1). \qquad (11)$$

For the case in which currents are led in and out of the ring at points on the NS diameter in Fig. 3, Wesley shows that the total azimuthal force of all quadrants) is four times that of the first quadrant,

$$\delta F_{\phi_o} = -\left(4i_{amp}/10\right)\left[A_{\phi_o}(\pi/2) - A_{\phi_o}(0)\right]. \qquad (12)$$

The minus here results from the first-quadrant current flowing CW in our diagram.

A similar formula applies to our truncated-solenoid case where $A_{\phi_o}(\phi_o)$ is the total quantity given by Eq. (9). However, we need to treat a more general case in which the infinitesimal solenoids are located not necessarily on the current in-out azimuth but at any azimuth. We consider a symmetrical pair of NS solenoids oriented at an arbitrary azimuthal angle φ measured with respect to the NS diameter shown in Fig. 3 (the current lead in-out axis, considered fixed in azimuth). We have shown elsewhere[6], by employing symmetry arguments [here reflected in the symmetry $G(u) = -G(-u)$], that for the case of solenoids at angle φ the total force on the ring has the value

$$\delta F_{\phi_o tot} = -\left(4i_{amp}/10\right)A_{\phi_o tot}(\pi/2 - \varphi) = -\left(4i_{amp}/10\right)G(\cos\varphi). \qquad (13)$$

(The demonstration was for infinite-length solenoids, but the formula holds for the finite-length case as well.) Here G is the function defined in Eq. (9), its argument u being evaluated by means of $u = \sin\phi_o = \sin(\pi/2 - \varphi) = \cos\varphi$, wherein the sign of φ is immaterial. For small $|\varphi|$ we have $G(\cos\varphi) > 0$, hence the total force on the ring is negative, indicating CW ring rotation as seen from above. This has been confirmed observationally for permanent magnets used as vertical members of the toroid. With the use of Eq. (9), Eq. (13) is ready to be integrated over whatever magnet shape we choose. By performing this integration, which in general must be done numerically, we shall finally free ourselves of both idealizations, "infinitesimal magnet" and "infinitely-long magnet."

The "parenthesis" shape of magnets shown in Fig. 4 has been chosen arbitrarily for present consideration. This shape happens to integrate in closed form for the infinite-length magnet case, but not for the finite-length case (as far as I can determine). It is assumed, as suggested by the figure, that the N-S magnets are symmetrical as to strength, length, and position. Considering such magnets to form the stator of our motor, and the surrounding ring the rotor, we may calculate the torque on the ring simply by multiplying our integrated total force by the ring radius r_o at which it is applied. Thus, integrating the azimuthal coordinate as φ and the radial coordinate as b, we take our infinitesimal element of area to be $\delta A = b\,db\,d\phi$ and obtain for the magnitude of torque on a single ring (dropping the minus sign)

$$T_{1\,ring} = r_o \iint \delta F_{\phi_o tot}\,\delta A = CI = Cr_o \int_c^d b\,db \int_{-p}^{p} G^*(\cos\varphi)\,d\varphi\,, \qquad (14)$$

where the integration limit c is the inner magnet radius, d its outer radius (less than ring radius r_o), and p is the half-angle in radians subtended at the motor center by either of the magnets, as shown in Fig. 4. The function $G^*(\cos\varphi)$ is one-quarter of the square-bracketed expression in Eq. (9), wherein at every appearance of u this quantity is replaced by $\cos\varphi$. The multiplier C is $C = 4B_o i_{amp}/10\pi$. (There is no reason for handling the factors of 4 this way except for consistency with my previous papers.) The quantity I in Eq. (14) is a number obtained through numerical integration and will be referred to as the "torque integral." It refers to a *single ring* and is specified by numerical values of the parameters $r_o, c, d, p, \alpha_o, \beta_o$. To yield an actual torque value it must be multiplied by C and by a units factor 7.3757 x 10^{-8} to convert from dyne-cm to U.S. practical units of ft-lb of torque. Thus the torque magnitude exerted by both magnets upon a single ring is

$$T_{1\,ring} = \frac{4B_o i_{amp}}{10\pi} I \times 7.3757\times10^{-8} = 9.391\times10^{-9} B_o i_{amp} I \ \text{(ft-lb)}. \qquad (15)$$

To gain a feeling for magnitudes, consider B_o = 6000 gauss, i_{amp} = 50 amps. Then $T_{1\,ring}$ = 0.002817I, and since (as we shall see) a typical value of I for wheel-like dimensions is around 100, we can expect only about 0.28 ft-lb of static torque per ring. Hence the need for multi-ring designs.

Specific Design Example: Motor in a Wheel

We now indicate how the foregoing theory can be applied to the design of a motor in a wheel, based entirely on the Marinov motor and without extraneous mechanical elements such as the in-wheel gears used in some current traction motors[9,10]. As

New Energy Times Archive

previously noted, we concern ourselves primarily with the magnitude of static torque – not because this is all that needs to be known, but because without adequate torque the whole concept fails and can be discarded at once.

We focus attention on a single wheel, keeping in mind that there are four that must work together. We specify a maximum dimensional envelope of about 12-inch width and about 20-inch diameter. It is arbitrarily assumed that permanent magnets of roughly parenthesis shape (Fig. 4) can be provided with internal B-field of 6000 gauss (0.6 Tesla), and that these are durable enough for indefinite use. For short demand periods (maximum static torque) we specify availability of up to 50 amps DC per wheel from, say, a 48-volt DC supply. We arbitrarily specify the use of non-critical materials – notably aluminum rings rather than copper, although copper is more efficient and allows shrinking the over-all design to a somewhat smaller physical envelope. We shall aim for around 60 ft-lb of torque per wheel. Since we have seen above that we can expect only about one-quarter of a foot-pound torque per ring, a design goal of 60 ft-lb implies the use of over 200 rings. If the same 50 amps is to serve for all, these rings associated with a single wheel must be wired electrically in series. Their geometrical arrangement and interconnection present the main design problems with which we shall be concerned.

The choice of conductor gauge for the rings – in fact the whole design process – is a matter of successive approximations arrived at through design cut-and-try. For a first approximation let us try #6 AWG (B.&S.) gauge aluminum wire, of square cross section (for good packing). With some allowance for insulation, this means that each ring has cross section 0.366 cm x 0.366 cm. Such a conductor has a fusing current over 400 amps and an allowable carrying capacity for indefinite use of around 50 amps, so we are heavily over-designing – inasmuch as, given good traction, 4 x 60 ft-lb of torque applied at the wheels and sustained indefinitely would soon launch our projectile to the moon.

Before giving any more numbers, let me describe the multi-ring concept to be employed. This is a matter of invention, and others can presumably do better in that department, so I shall make no claims but merely try to suggest possibilities. The basic conception of the motor with some of its magnets and wiring is indicated in Fig. 5. Two pairs of coplanar, parenthesis-shaped magnets, the pairs themselves situated in parallel planes and oppositely oriented as to north and south poles, form part of the stator, attached to the chassis of the vehicle. Each coplanar magnet pair will be referred to as a "stage" of the motor. The separation of the two stages shown is greatly exaggerated for clarity. The encircling rings, constituting the motive part of the rotor that moves the tire, are arranged in two groups, each opposite (closely adjacent to) one of the two coplanar magnet pairs, and are considered as belonging to the same "stage" as that pair. The rotor is linked to the wheel axle through bearing supports near the axle, not shown. Near the axle, also, electrical slip rings lead direct current of the correct polarity into and out of the rings. Stage width is magnet width plus the width of magnet keepers (not shown).

Referring to Fig. 5, the ring wiring proceeds as follows: Current is brought in to point A (as mentioned, through slip rings not shown), which is fixed on the rotor, and thence into the "first ring." However, this is only a half ring, which carries the current around to point B. This is the place where, in the original Marinov design, stator brushes would remove it; for if it continued farther around the circle it would exert retro-torque. To use the same current over again, as we must for an efficient design, we need somehow to get it back to the other side near point A once more. How to do this? Well, we could simply run an extra conductor back to point A, routed as much out of the way as possible. But that would be wasteful of conductor or worse, since a current counterflow anywhere near the flow we have already provided would tend to cancel its effects.

The thing to do is run the current *up* in the diagram from point B on the first stage to point C on the nearby second stage. That minimizes conductor wastage and allows the return flow to exert torque in the right direction to add to that of the first stage – for the second stage magnets have their polarities inverted. The inter-stage wiring, shown as dotted, is shorter than it appears on the diagram, because the drawing exaggerates vertical stage separation for clarity. So now, at the second-stage level our conductor can return (on either side) to the A-side of the wheel, exerting its full contribution of torque. At point D it then descends to stage 1 at point E and does another half-encirclement on the other side, around to F near point B, up again to stage 2 at point G, to return on the other side to point H near point D. From H it descends again to the vicinity of point A,

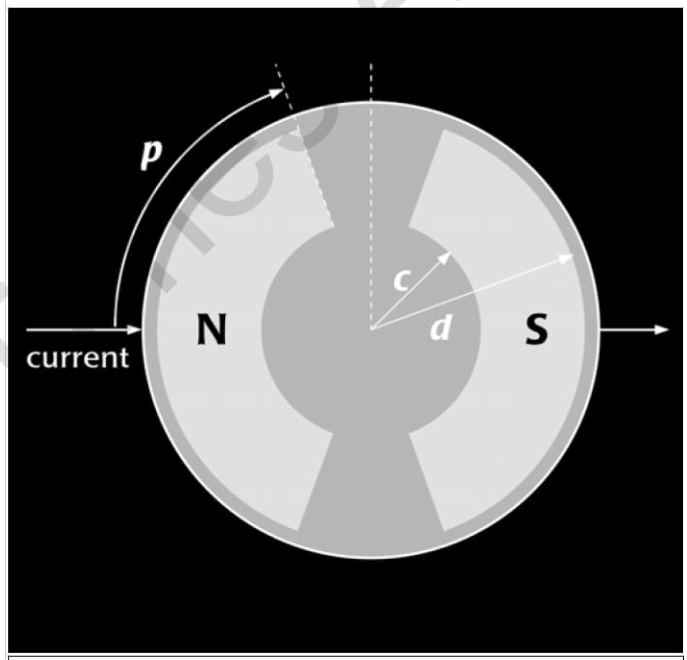

Fig. 4. Top view of "parenthesis shaped" magnets assumed in the present analysis. The magnets are of equal extensions in the dimension not shown. Three parameters, *c*, *d* (both in cm) and *p* (in radians) specify the magnet geometry in plan view.

thus completing "ring 1" on each of stages 1 and 2. A similar series winding process is repeated for additional rings as required for the needed total torque.

The magnets of both stages are capped on both top and bottom by "keepers"- flat sheets of high-permeability material (*e.g.*, soft iron) that confine most of the **B**-flux, reducing its damaging effects on the external environment (eddy currents, etc.) and allowing the opposed strong magnets to be brought into close mutual proximity. (We assume perfect elimination of external flux, although this is an ideal hardly attainable in practice. It is this design goal of flux elimination that distinguishes the Marinov motor, as much as anything else, from conventional electric motors.) Our objective is to enable a total of four stages of the kind we have described to be squeezed into the 12-inch total wheel width specified. These stages would be wired together in pairs electrically, stage 1 to stage 2 and stage 3 to 4; but in order to smooth-out the torque curve it proves to be desirable to orient the stator magnets of stages 3 and 4 at 90

New Energy Times Archive

degrees to those of stages 1 and 2, as indicated in Fig. 6. To prevent the adjacent magnets from fighting each other too strongly, the physical stacking order of the stages might for instance be taken to be 1,3,2,4. (But the electrical wiring order must be kept 1,2,3,4.) This necessitates a doubling of the lengths of conductor segments bridging between stages, but is judged to be advantageous because physically adjacent stages may then gain some help from adjacent magnets, whereas in the 1,2,3,4 order all "cross-actions" between adjacent stages possessing opposed magnets reduce net torque.

As the rotor turns relatively to the stator, the geometry changes. Polarity changes of the input current must be effected in order to maintain unidirectional torque. The required changes are different for stages 1-2 and stages 3-4. The needed polarity changes are indicated in Fig. 6. They could be effected by suitably split slip rings or by electronic switching arrangements (*e.g.*, employing thyristors[9]). For any electrically associated pair of stages, such as that shown in Fig. 5, the current polarity change must come twice per cycle – for instance, when fixed point A on the rotor (in turning CW) reaches the "dead point" on the stator, marked as azimuth "X" in Fig. 5, and again one-half cycle later when A arrives at the opposite point 180 degrees from "X." This applies to stages 1 and 2. Stages 3 and 4 must be connected through separate slip rings, so that they receive their current polarity changes by the same rule of "dead point," which in time or azimuth is 90 degrees off from that of stages 1-2. This sounds complicated, but is child's play compared to three-phase motor designs routinely accomplished by electrical engineers.

Let us get down to the business of calculating the torque exerted by a typical "ring." We have seen that for best practical design the rings need to be split into half rings interconnected between stages, in order that the full 50 amps, or whatever, may flow on both sides of the ring, thus doubling torque (for the original Marinov arrangement, shown in Fig. 1 divides the current so that only 25 amps flow on each side). Because proximity is always important for electric or magnetic effects [Eq. (2) exhibits the typical $1/r^2$ fall-off with distance], we must arrange for minimum clearance between stator and rotor. This will be assumed to be 0.060 inch, typical of established electric motor practice[9]. Consider Fig. 7. This shows in fixed-azimuth section the outer edge of the magnet stator of a single stage, together with the keepers at both sides of this magnet. It also shows the (radial) clearance space and (in cross section) some of the square conductors of the "rings." The magnetic field "lines" will be understood to run left or right in the diagram; and, as stated, we consider all **B**-flux to be confined within the magnet and keepers. The figure shows some of the square-conductor rings to the left of the magnet center-plane, omitting those to the right, which are symmetrical with those shown and exert the same torque. We suppose for convenience of calculation that in each successive layer of conductive rings the square conductors butt against the extended center-plane of the magnet, as shown. The square turns are understood to be electrically insulated from each other and from the rotor housing (not shown) in which they are embedded.

Let us put in some numbers. Magnet parameters: Inner radius $c = 5$ cm; outer radius $d = 20$ cm; half-angle subtended at center $p = 80$(degrees) x $\pi/180$ (radians/deg). These parameter values are somewhat arbitrary but not capricious. Magnet width (in Fig. 7) or thickness is determined as follows: For 12-inch outer width of the housing (assumed 1/8 inch thick), we have about 11.75 inches = 29.8 cm available width, or 7.45 cm for each of the four stages. Each stage has two keepers, each of arbitrarily assumed thickness 1/4 inch = 0.635 cm. This leaves 7.45 - 2 x .635 = 6.18 cm as the magnet width per stage. We assume that the rings do not extend laterally beyond the magnet, so the rings shown on the left in Fig. 7 should not extend to the left beyond the magnet half-width 3.09 cm. For simplicity we treat each ring as if it were a current filament located at the center of its square cross section and marked by a central dot in Fig. 7. Considering rings of the first layer (closest to the magnet), they all have radius $r_o = d$ + (clearance) +(ring half-width) = 20 + 0.06 (inch) x 2.54 (cm/inch) + 0.366/2 = 20.3354 cm. By the same token the nth layer of rings is at radius $r_o = d$ + (clearance) + 0.366 (n-1/2) for n = 1,2, ….

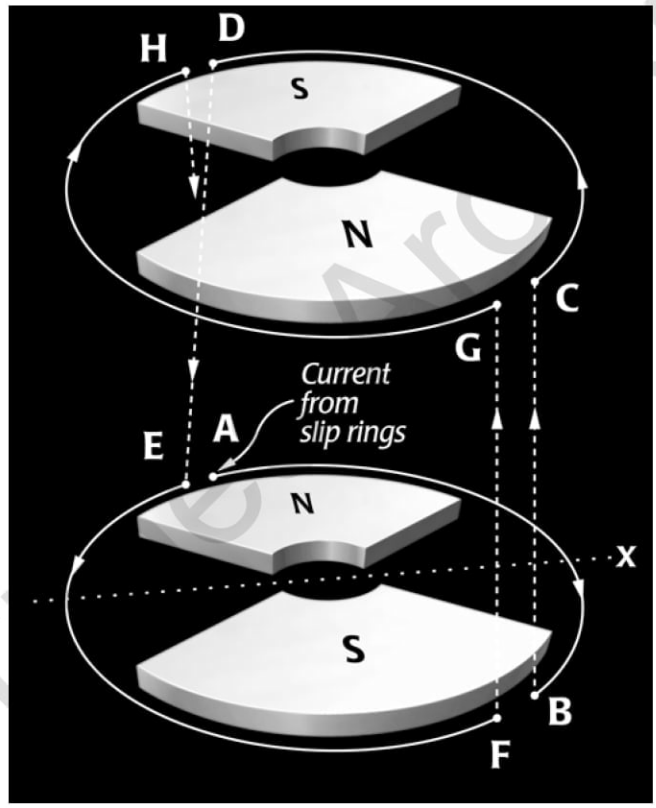

Fig. 5. "Exploded" view of two stages of a Marinov motor-in-a-wheel. The stages shown are electrically wired together, as indicated, but need not be physically adjacent to one another. The magnets marked N and S are the stator; the outer encircling rings belong to the rotor. Note magnet polarity reversal in the two electrically-connected stages. After a full quota of these rings or windings have been stacked in series, the current must return to a different set of slip rings before being led to another pair of stages in which the stator magnets are oriented at a different angle. The azimuth marked "X" denotes the "dead point" at which zero torque is exerted when point A on the rotor reaches it. Maximum torque occurs when point A is at 90 degrees in azimuth from the X direction. "Keepers" on the magnets are not shown.

For each of these n-values up to $n = 5$, and for the other parameter values as mentioned above, we have calculated by numerical integration the torque integral I defined in Eq. (14). The results are graphed in Fig. 8. We see that they make sense, in that the strongest torque is exerted on the layer (denoted n1 on the figure) of rings closest to the magnet, and that torque falls off uniformly with ring distance from the magnet. Rather than trying to read torque integral values off the graph, it is simpler to fit a polynomial to the calculated points to allow easy interpolation. We find that for a given n-value a cubic

$$I = a_0 + a_1 x + a_2 x^2 + a_3 x^3 \tag{16}$$

suffices to give fits with 0.999 correlation by least-squares fitting. For the five n-values the best-fitting polynomial coefficients $a_0, a_1, \ldots, a_3$ are given in Table 1. Naturally, these coeffi-

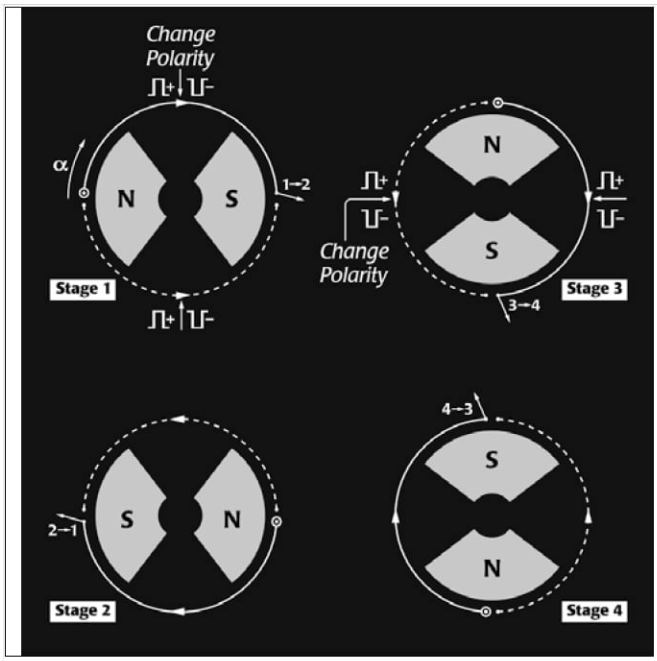

Fig. 6. Top view of the four stages of proposed design of Marinov wheel motor, showing each as separate from the others and indicating azimuths at which polarity-switching of supply current must occur to keep torques unidirectional. For stages 1 and 2 polarity changes must occur at ring rotation angles $a = 90°$, $270°$. For stages 3 and 4, they must occur at $a = 0°, 180°$. The notation 1→2 means that at the indicated azimuth a "jumper" wiring connection conducts series current from stage 1 to stage 2 at about the same azimuth. The conductor in stage 2 that receives this current is shown as dotted. Note that stage 3 and 4 magnets are oriented at 90° to those of stages 1 and 2.

cients are valid only for the parameter values (d-value, etc.) assumed in this particular calculation. The parameter x is distance in cm from a reference plane defined by the left edge of the magnet in Fig. 7. Note that the torque does not go to zero there, so rings could be allowed to extend beyond the magnets … but it seems inadvisable to do this, because of the proximity of the next stage, wherein the magnets are differently oriented and thus likely to produce counter-torques. (No attempt has been made to estimate these cross-stage interactions, which will for the most part adversely affect torque.)

The magnet center plane being at $x = 6.18/2 = 3.09$ cm, we can for any given layer of rings (given n-value) determine the center coordinate of the mth ring, counted from the center plane, by the linear formula $x = 3.273 - 0.366m$. That is, $m = 1$ designates the first ring adjacent to the magnet center plane and having its center therefore at $x = 3.273 - 0.366 = 2.907$ cm from the left edge of the magnet. Thus any ring is identified by the value of two integers, m,n, which tell us that it is the mth ring from the center plane in the nth layer of rings, counting the innermost as first. The maximum value of m is 8 or perhaps 9, although that gets us beyond the magnet edge (x negative). Values of the torque integral are tabulated in Table 2 for n from 1 to 5 and m from 1 to 8. The procedure is to pick a layer number n and a ring number m, calculate x from the above linear formula, determine the fitted polynomial a-coefficients from the nth row of Table 1, and calculate with these coefficients the I-value from Eq. (16). This I-value is directly proportional to the maximum torque exerted by that particular ring at the moment when it is at the most favorable azimuth, corresponding in Fig. 5 to the point A being just opposite the geometrical center of the magnet. To get maximum single-ring torque in ft-lb, we have only to apply the multiplier in Eq. (15). In our present example torque = $0.0028173I$ (ft-lb).

From Table 2 we see that as n increases the torque values fall off in magnitude and also fall off more rapidly with m. Therefore, for a given torque performance level it is desirable to shorten the outer layers. In any case, as one might expect, the inner layers do most of the work. Suppose we set an arbitrary performance criterion level of I ≥95. Then this criterion is met only by the m-values above the snaky line drawn across Table 2. Below that the I-values do not meet the criterion, and we consider they are not "pulling their weight." They can of course be included, since they are making a positive contribution, but they are dragging average performance down, so we may wish to do without them. Let's try. If we keep only the rings above the line, then in each of the first two layers the half-number of rings is 8 – meaning 16 rings per layer, counting those on the right side in Fig. 7, omitted from the drawing. These are seen to have an average I-value of 120.405 for the innermost layer and 112.982 for the second layer. The third full layer has 14 rings with average $I = 108.374$, the next 12 with average $I = 103.749$, and the fifth 10 rings with average $I = 99.183$. Thus the number of rings per stage is 68 and the grand average maximum torque per ring is $I = 110.121$, or this times 0.0028173 to give 0.31 ft-lb. The maximum torque per stage is 68 times this, or 21.1 ft-lb.

This maximum torque is only the most favorable case for one stage. One cannot simply multiply single-stage performance by four to get the total performance of a four-stage motor. However, it is not too hard to determine how the various stages cooperate by reference to a diagram such as Fig. 6. Let us designate as α the angle of rotation of the rotor (the outer set of rings) from the orientation shown, considered as $\alpha = 0°$. At time $t = 0$ and angle $\alpha = 0°$ we see that stage 1 and stage 2 are in the classic Marinov orientation to yield maximum torque. Stages 3 and 4, however, are at their null or "dead" positions where they deliver zero torque. Thus the total torque delivered by the motor at $\alpha=0°$ is 2 x 21.1 or about 42 ft-lb. By working through the effects of successive increments of α one can show that this $\alpha = 0°$ position is actually the *minimum torque orientation*, and that the maximum for the four stages working together comes at $\alpha = 45°$and has a value of almost 74 ft-lb. (I do not give these calculations here … they are most easily done for the infinite-length solenoid case, which is integrable. The *relative* torque magnitudes for different α-values are the same for the finite and infinite solenoid cases.) The calculated whole-motor (4-stage) torque rises smoothly from the minimum value at $\alpha = 0°$ to a maximum at 45 degrees, then symmetrically declines again to the same minimum at $\alpha = 90°$, as shown in Fig. 9 (top curve – the lower curve

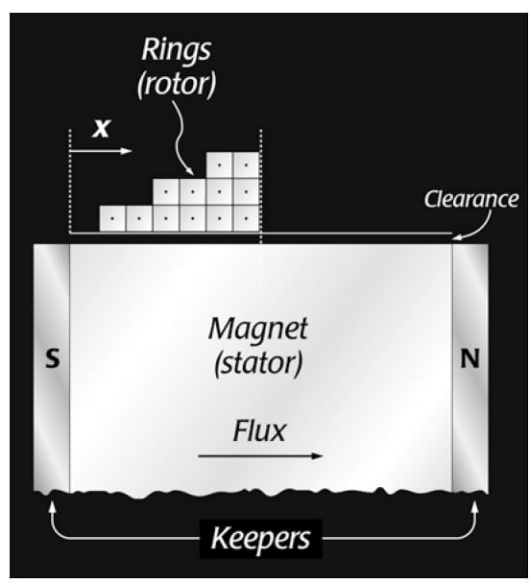

Fig. 7. Cross sectional view at fixed, arbitrary azimuth of a single stage, consisting of magnet with keepers (producing a flattened quasi-toroidal geometry for the internal flux) and the nearby rotor rings of assumed square cross section, stacked in layers, with clearance space shown. Only half the rings are indicated, the others being a mirror image in the magnet central plane. Coordinate x is measured from the left edge of the magnet.

New Energy Times Archive

is for a single stage). This repeats three more times around the circle, so that there are four minima and four maxima of total torque during each rotation of the wheel. One of the reasons we went to a four-stage design was to smooth-out the torque curve. Clearly we have been reasonably successful. There is a rough analogy to the torque smoothing obtained by adding cylinders in an internal combustion engine.

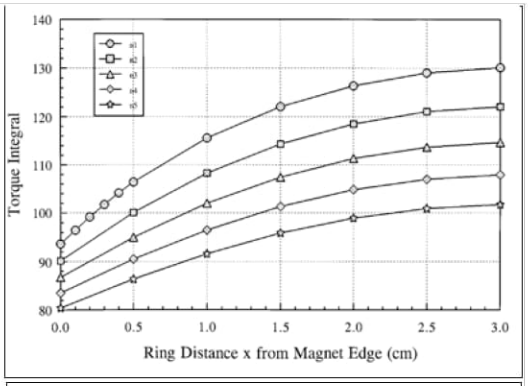

Fig. 8. Values of single-ring torque integral *I* as a function of coordinate *x* defined in Fig. 7. Uppermost curve is proportional to maximum torque exerted on a ring at position *x* in the innermost layer of rings, denoted n1. The next curve is the same for the second layer, n2, etc. Torques are seen to be maximal at the center plane of the magnet at *x* = 3.09 cm.

Averaged over an integral number of cycles, the torque is 63.16 ft-lb, so we have amply met our design goal of 60 ft-lb. Moreover, the minimum of 42 ft-lb is very respectable, particularly if we consider that there are four wheels, which on installation can be differently oriented, so that no two in front or in back or on one side are at their torque minima simultaneously.

IR Drop

Now we come to the bitter bit. With 68 rings per stage and four stages, we have 272 rings, having mean radius 20.981 cm. Each stage is 7.45 cm wide, and we have to interconnect by jumping over one stage, so there are two jumper connections per ring, each of length 2 x 7.45 cm. A rough estimate of the length of square wire needed per wheel is therefore 272(2π x 20.981 + 4 x 7.45) = 43963 cm, or about 440 meters. At 20° C. #6 hard-drawn aluminum wire is listed at 2.13 ohms per kilometer; so the total resistance of all the series windings in one wheel is 0.937 ohm. At 50 amps DC the power consumption due to resistive losses is 2.35 kilowatts, and the IR drop is 50 x 0.937 = 47 volts, and both can go up by 20% or more at 75°C. Thus we have missed our design target of a 48-volt system. To operate with a comfortable torque reserve it will be necessary to go to at least a 72-volt system. This assumes the four wheels are wired in parallel. If they are in series the voltage demand rises to over 300 volts. Parallel wiring is preferable, for the same reason Christmas tree lights and street lights are best wired in parallel.

n	a_0	a_1	a_2	a_3
1	93.6831	28.9111	-7.6510	0.6885
2	90.09095	22.4345	-4.4878	0.18556
3	86.7016	18.1345	-2.8563	-0.02889
4	83.4668	15.0716	-1.9591	-0.1173
5	80.3715	12.7862	-1.4475	-0.1464

Table 1. Curve-fitting constants a_i (cubic polynomial coefficients) used in Eq. (16) for approximating the torque integral curves of Fig. 8. The *n*-values enumerate ring layers, *n* = 1 corresponding to the innermost layer, *n* = 2 to the next adjacent, etc.

m	$n=1$	$n=2$	$n=3$	$n=4$	$n=5$
1	129.985	121.942	114.571	107.843	101.712
2	129.042	121.165	113.865	107.190	101.113
3	127.455	119.565	112.335	105.773	99.826
4	125.021	117.087	109.989	103.626	97.898
5	121.539	113.677	106.835	100.783	95.368
6	116.806	109.279	102.883	97.280	92.280
7	110.619	103.840	98.141	93.150	88.678
8	102.775	97.304	92.617	88.429	84.604

Table 2. Torque integral values calculated for individual rings. In the geometry of Fig. 7 *n* enumerates the ring layer number (*n* = 1, innermost layer, etc.) and *m* is the number of the ring counted outward from the ring (*m* = 1) adjacent to the magnet center plane (see Fig. 7). The wiggly line separates torque integral values above and below an arbitrary torque level, *I* = 95.

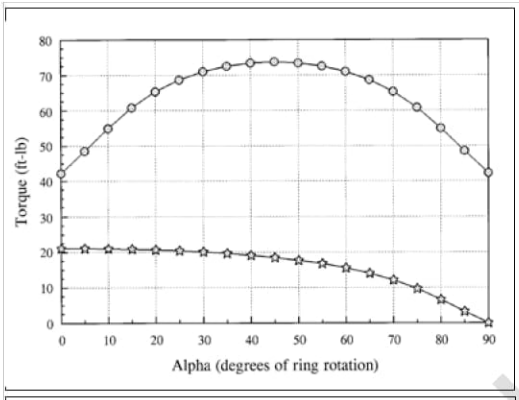

Fig. 9. Torques in one quadrant of ring rotation, α_i = 0° to 90°, for 4-stage series wired motor (upper curve) and for a single stage (lower curve) for 50 amp DC input. These are considered accurate except for losses due to inter-stage interactions not analyzed.

What to do? Well, we could go to larger conductors, substitute copper (particularly for the inner windings), etc. #3 conductors have twice the cross sectional area of #6. In square form they would measure about 0.518 x 0.518 cm^2. However, this is costly in torque, because the larger conductors must extend into the regions of lower torque-integral values and thus will perform with lower torque efficiency. Moreover such extensions will push out the motor radius, which, at about 9.75 inches in the present design is already more than most conventional auto stylists are likely to be happy with. Or, we could try design tricks, such as heavy copper or even silver cladding of the inner surfaces of the innermost rings, to enhance torque by drawing the current inward toward the magnets. But such possibilities seem to offer at best rather limited improvements.

The lesser evil may be simply to accept the higher-voltage system. This is not so bad as it may seem. During most of the vehicle operating time the current draw will be an order of magnitude lower than 50 amps, and the IR drop and I^2 R losses will be correspondingly reduced. Moreover, designers of present-day electric vehicles of more conventional type are reportedly being forced to higher voltages, some as much as 300 volts or more. Thus Ref. 9 [p. 265] states that "prototype electric cars have batteries at 24 to 432 volts. The trend seems to be about 100 V or even up to 200 V …"

Thus it is apparent that safety problems at these higher voltages have somehow come to be considered solved. It's all a matter of what is socially acceptable in a prevailing propaganda environment … as engineers for nuclear power stations have been forced to recognize. An irrational element in our population will always impose a demand for zero-risk solutions as a barrier to new technologies, even those that reduce old risks – and we have seen that the media are more susceptible to the emotings of this element than to the voice of reason that recognizes all risks and seeks to balance them. (We the public have grown accustomed to sitting on top of 15 gallons of highly "flammable" explosive – so, to the irrational element, that is no risk. But think of the field day modern Chicken Littles could have if that were a *new* proposition embodied in new technology.)

Back EMF

Marinov thought that there would be no back electromotive force (EMF) and it was on the basis of this opinion that he initially declared his motor to be a perpetual motion machine. He abandoned this opinion just before his death and went to the

New Energy Times Archive

other extreme, accepting the Lorentz force law, which offers no explanation of his motor action at all. Such an about-face is a logical non sequitur. But perhaps he was not thinking too clearly at the end.

It is admittedly far from obvious what may be the detailed physical mechanism by which a back EMF is generated. The whole subject is so new as to be fraught with still-unresolved conceptual problems. For example, the eminent French physicist O. Costa de Beauregard has termed[11] the problem regarding the torque exerted by ring current on Wesley's magnet solenoids "a real conundrum." He states it as follows: "Maxwell's mutual energy density $\mathbf{B} \cdot \mathbf{M}$ is located *within* the magnet which, idealized as a filament guiding a *conserved* flux Φ, contains a mutual energy $W = I\Phi \oint \mathbf{B} \cdot d\mathbf{l} = I\Phi \iint \mathbf{j} \cdot d\mathbf{s}$. The trouble is that **the double integral is constant** because the current flux **j** is guided in a wire! So *W varies not if the magnet moves*, and *the magnet feels neither force nor torque*!" I have no ready answer to such problems (although I have personally observed[6] the magnet turning and have great faith in Newton's third law, despite its rejection by relativists.). In my opinion[2] Maxwell's equations will have to be changed to accommodate the Marinov motor, and the alteration, when assimilated, may provide solutions.

Here I shall simply *assume* that a back EMF is generated from the moment the motor starts to turn. This assumption plus the conservation of energy allows the back EMF to be *calculated*. You can take the result or leave it, but I suggest you take it, as I have done a small experiment, using my Marinov motor model as a generator, that seems to confirm the formula (18) derived below. If current i_{amp} is furnished to a wheel at voltage E_o, conservation of energy tells us that for a dominantly resistive load R

$$E_o i_{amp} = i_{amp}^2 R + (Torque) \cdot \omega \tag{17}$$

where $\omega = 2\pi f$, f being the wheel rotation frequency in cycles per second. The back EMF is given by the last term divided by current; *i.e.*,

$$E_{back} = \frac{(Torque) \cdot \omega}{i_{amp}} = E_o - i_{amp} R \tag{18}$$

Minimum wheel torque in a four-stage motor (wherein two stages are effective) has herein been expressed for N rings per stage as $2NCI$, where I is our average single-ring torque integral having a value around 110, and $C = 4B_o i_{amp} / 10\pi$. Thus we see that i_{amp} cancels, leaving (with introduction of a units factor of 10^{-7} to convert to volts) a value

$$E_{back} = 10^{-7} \frac{8B_o}{10\pi} NI\omega = 1.6 \times 10^{-7} B_o NIf \quad \text{(volts).} \tag{19}$$

For our assumed 6000-gauss magnets and $N = 68$, this means a two-stage maximum back EMF of 7.18 f volts and a 4-stage maximum 75% larger. If correct, this suggests that in order to get out of "low gear" some means of dealing with back EMF must be found. There are two approaches: Overcoming it and reducing it. Reducing back EMF cannot be done by merely reducing current to the wheel, because we have seen that i_{amp} cancels from (19). Since we are using permanent magnets, it cannot be done by reducing B_o, unless we wish to complicate the mechanical design by providing for progressive withdrawal of the stator magnets, so that the clearance gap widens as speed picks up. That is of course an available option (*e.g.*, by automatic mechanical control based on centrifugal force), but it is not an elegant solution.

Since the integral I is determined by fixed geometry, not much can be done with it. We might reduce the effective number of rings N by progressively shorting them out, as could be done with a moveable buss bar. Shorted rings would continue to generate their individual back EMF's, but these would no longer add up in series. Again, this seems inelegant. Reducing back EMF is undoubtedly best done by controlled phasing of current pulses. Wherever the *torque per ampere* is low the back EMF is low [see Eq. (18)]. This occurs near $\alpha = 90^\circ$, as can be seen from the single-stage torque curve of Fig. 9 (lower curve – multiply the ordinate by two for stages 1-2 in series and divide by 50 to get torque per ampere). Current pulsing near $\alpha = 90^\circ$ (where torque/amp is roughly linear with phase angle) should be capable of solving the back EMF problem very neatly.

We turn now to methods of *overcoming* rather than reducing back EMF, and ask if the matter could be handled electronically, without mechanical engineering of any kind. This seems worth study. The possibilities again include on-off pulsing of current and phasing of the pulses. If the tires have rolling diameter of 25 inches, then at 80 mph f is 18 rps, so two stages (1 and 2) will generate a maximum back EMF of about 130 volts. The "overcoming" approach takes either of two forms. The first is to go to a *higher voltage basic supply* (accumulator). Because of its simplicity, there is much to be said for this solution. With a 150-volt basic supply and stages 1-2 wired in parallel with 3-4 (rather than in series), one could simply use brute voltage to "outvote" the back EMF, even at top vehicle speeds. The second approach is to find (if possible) some electronic means of boosting peak voltages during short on-times (limited duty cycle). Thus with pulsed peak voltages exceeding 300 volts the series wiring of stages 1-2 and 3-4 can be retained, with no practical limitations on vehicle top speed. Adjustment of pulse amplitudes, durations, and/or phases should be capable of providing adequate speed control at all speeds. Clearly, pulsing offers the possibility of combining the "reducing" and "overcoming" approaches to back EMF control. How could the pulsing be accomplished? Simple switching can be done by replacing our mechanical "slip rings" with thyristor switches or some more modern equivalent, which could be adjusted arbitrarily in their timing, at the vehicle operator's ultimate control.

Suitable timing and current polarity choice could also produce EM braking (negative torque). Emergency EM braking might in principle apply full negative torque up to our calculated maximum magnitude by going to a 180° phase change from the positive torque maximum. But for braking at high vehicle speeds this would be undesirable from the melt-down standpoint of high current generation (230 peak volts of back EMF, for four stages in series, across a wheel total resistance of about an ohm implies that we are looking at up to 230 amps of current per wheel – incidentally suggesting the feasibility of substantial energy recovery through "regenerative" braking) and from the standpoint of wheel lock-up. Tire skidding would have to be avoided in EM braking, probably by having separate computer-monitored sensors of vehicle ground speed and wheel rotation rate. Each wheel should incorporate its own anti-skid controls. Highly reliable automatic controls of emergency EM braking, if developed, should obviate separate friction brakes. This assumes, quite reasonably, that EM braking can be superior in all-weather stopping ability to friction braking.

The present motor design does not offer impressive horsepower - not more than 50-60 hp at top speed, total for all wheels. But it would seem for most purposes that horsepower is not a meaningful figure of merit to which the user can relate in any instinctive way. What the driver *feels* is torque - the ability to change speeds rapidly. With proper system design a Marinov-type motor should deliver strong torque at any speed.

Phipps continued on page 85

New Energy Times Archive

AquaFuel,
AN EXAMPLE OF THE EMERGING NEW ENERGIES AND THE NEW METHODS FOR THEIR SCIENTIFIC STUDY

by Ruggero Maria Santilli
Institute for Basic Research, P. O. Box 1577, Palm Harbor, FL 34682, U.S.A.
ibr@gte.net, http://home1.gte.net/ibr/

Technical report of TOUPS TECHNOLOGY LICENSING number TTL-98-RMS-002

Summary

In this paper we initiate systematic studies on the novel methods needed for quantitative scientific studies of the emerging new forms of energy, by using as a representative example the new combustible gas called AquaFuel, discovered and patented by *William H. Richardson, jr.*, whose rights are now owned by *Toups Technology Licensing, Inc. (TTL)*, of Largo, Florida. In essence, AquaFuel is a *new energy converter* capable of transforming carbon and water into a new combustible gas via the use of a suitable electric discharge. We show that AquaFuel can be produced easily, safely, and rapidly in large amounts, has novel physical and chemical characteristics, and exhibits greatly reduced emission pollutants as compared to fuels currently used. We then review nine basic experimental measures currently under study by TTL which are necessary for a scientific appraisal of AquaFuel. We outline the limitations of quantum mechanics and chemistry for the treatment of "new" forms of energies, namely, energies which by definition should be "beyond" said theories. We point out the availability of broader theories specifically constructed for the study of new energies and point out available applications. Detailed studies on the origin of the AquaFuel energy and its energy balance will be presented at a later time upon completion of the systematic experimental and theoretical studies currently under way. These results are expected to be significant for various other forms of new energies.

1. THE BASIC PROCESS UNDERLYING AQUAFUEL

AquaFuel is a new combustible gas discovered and developed by William H. Richardson, jr, which is covered by the patents listed in Refs. [1]. Its rights are now owned by Toups Technology Licensing, Inc. (TTL), a U. S. corporation in Largo, Florida, which is continuing its development. Starting from the three basic elements of nature, hydrogen, oxygen and carbon, AquaFuel is produced during an electric discharge across an arc between carbon electrodes immersed in distilled, fresh, or salt water.

The patented process is basically different from electrolysis. In fact, in electrolysis, water must be complemented with electrolyte to carry the charges from the negative to the positive poles of the power source. In AquaFuel charges are instead stimulated by a sufficient voltage difference. In the latter case, no addition of electrolyte chemicals is needed to create a conducting path. As we shall see, this property of AquaFuel is important to minimize pollutants in the various applications.

According to currently available scientific knowledge, the main process underlying AquaFuel is constituted by carbon atoms breaking loose under discharge from the carbon electrodes and forming particular bonds with the water constituents, oxygen and hydrogen. The resulting new molecules cool as they bubble up to the water,s surface where they are collected and stored for various usages. The resulting combustible gas is called AquaFuel.

2. DESCRIPTION OF EQUIPMENT

As in Figure 1, a one-gallon fishbowl is three-quarters filled with distilled, tap, or salt water. Copper tubing conducts 24 volts continuous current (DC) to the tips of two 0.25‰ diameter carbon rods composed of 99% pure graphite, which are immersed in said water, one of whose tips is extended into a large diameter Carbon block.

The electric arc tunnels thru the water from the tip of the carbon rod to the large carbon block . The AquaFuel gas cools while bubbling to the water's surface where it is collected with an inverted funnel.

The electric arc produces a local temperature of the order of 5,000 °F. The process dissociates the water molecules by forming a local high temperature plasma composed of generally ionized atoms of carbon, hydrogen and oxygen, which are subjected to a number of physical and chemical processes. The final product is given by the recombination of said elements into a number of new molecules that cool down in the water surrounding the discharge as they bubble to the collection equipment.

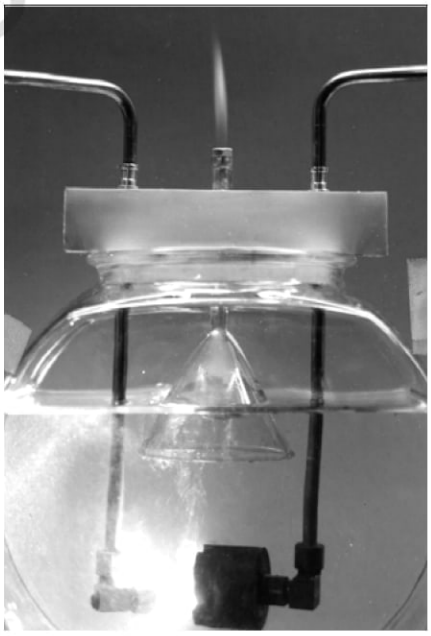

FIGURE 1
A view of the process underlying AquaFuel. Note the thin Carbon rod and the large Carbon block and the bubbling of the gas thru the water and its clean burning at the top (photo by Rob Jaeger and Ken Lindfors).

AquaFuel can be most efficiently produced via the use of continuous current (DC) in the arc. The use of alternating current (AC) in the arc is also possible, although with a reduced production rate.

The AquaFuel equipment is an *energy converter* because it converts the energy originally available (electricity, carbon and water) into *different* forms of energy.

In addition, the AquaFuel equipment is a *new* energy converter because its underlying processes are basically novel, as shown later on.

This paper deals only with the excellent characteristics of AquaFuel as a combustible gas without any consideration at this time of the ratio between the input and output energy which will be considered in a future paper upon completion of the needed experimental measures.

New Energy Times Archive

3. DESCRIPTION OF AQUAFUEL

The actual structure of AquaFuel as well as its main physical and chemical characteristics are still essentially unknown at this writing on scientific grounds because the needed experimental measures are still in progress (see Sect. 5).

The various studies completed until now have identified the following main characteristics:

1) AquaFuel is lighter than air, because it continues to rise in atmosphere, as shown in Fig. 2;
2) AquaFuel does not self-combust because of its low content of oxygen (estimated at about 1%);
3) AquaFuel is expected to be composed of H_2, CO, Oxygen and a number of hydrocarbons;
4) AquaFuel can run existing internal combustion (IC) engines with minor modifications in the carburetor;
5) AquaFuel has an astonishingly low pollutant content in its exhaust when compared to other fuels, such as gasoline, methane, coal, etc. ;
6) No pollution control equipment is needed for burning AquaFuel;
7) Engine oils remain much cleaner when burning AquaFuel because of less pollutants discharged during operation, thus lasting longer and reducing engine oil disposal;
8) The main gas produced in burning AquaFuel is carbon dioxide as it is the case of methane, whose precipitation into a solid form is under study;
9) AquaFuel is a stable, permanent gas, not like the mixture of hydrogen and oxygen emitted from ordinary electrolysis;
10) AquaFuel can be stored in ordinary tanks either as a gas or in its liquid form;
11) AquaFuel can be produced in any desired amount, whether small or large, and anywhere, whether on land or at sea;
12) AquaFuel is cheaper, simpler and more practical to produce than other fuels, such as gasoline, methane or pure hydrogen;
13) The AquaFuel technology can be used for recycling waste, such as sewer or rubber tires;
14) The AquaFuel technology can also be used to cleanse the air from pollutants;
15) AquaFuel uses much less oxygen than other forms of fuels because of its high internal content of oxygen in various compounds, thus providing a significant contribution to the reduction of the largest environmental problem of today: the apparent depletion of over 10% of oxygen already occurred so far in our atmosphere, and its exponential increase due to the excessively large number of automobiles and airplanes all using oxygen;
16) AquaFuel has a light, yet very characteristic and peculiar odor, which is an intrinsic characteristic not due to impurities or additives. This odor has considerable practical and safety values because other gases which are naturally odorless require the addition of odor via chemicals for safety purposes.

4. AVAILABLE MEASUREMENTS

Some of the most impressive aspects of AquaFuel are the simplicity, safety and rapidity of its production. As an indication, preliminary measures under verification indicate that the use of 36V in the arc permits the production in one minute of 30 liters of AquaFuel at ordinary pressure. The same production increases exponentially with voltage, thus permitting the rapid production of AquaFuel anywhere needed. Engine tests of AquaFuel were performed on a small IC engine at the *Briggs & Stratton Test Center* by comparing the new fuel to gasoline. It was established that AquaFuel requires only five parts of air to one part of fuel due to its large content of oxygen bonded in various forms. By comparison, other gases such as methane require from ten to fifteen parts of air to one part of gas. The results of the Briggs & Stratton test are as follow:

	Gasoline	**AquaFuel**
RPM	3060	3060
Torque	3.45	3.20
HP	2.05	1.86
Oil Temp.	227˚F	165˚F
Exhaust	751˚F	637˚F
Hydrocarbons	2436 ppm	185 ppm (parts per million)
CO%	4.343	.039
CO2%	12.086	14.695
Oxygen %	0.544	7.100
Hydrocarbon	13.367	0.001 g/hr (grams per hour)
Nitrogen Ox.	5.921	0.002 g/hr
CO	421.141	0.002 g/hr

The g/hr figures for CO are most impressive. The engine running on AquaFuel would have to operate for over 210,000 hours to equal the amount of CO produced in 24 hours while being fueled by gasoline.

Equally impressive is the presence of 7.1% of oxygen in the exhaust which is evidently important to maintain the oxygen balance in our atmosphere. This is a clear indication that AquaFuel is not a lien mixture, but a mix with excess power.

A preliminary analysis of the chemical composition of AquaFuel was conducted by NASA with the following results:

Hydrogen	46.483 %
Carbon Dioxide	9.329
Ethylene	0.049
Ethane	0.005
Acetylene	0.616
Oxygen	1.164
Nitrogen	3.818
Methane	0.181
Carbon Monoxide	38.370
Total	100.015

The above analysis does not conform to the performance of AquaFuel and other experimental evidence. First, the total BTU content of the gas is less than 300 according to the above data, while the Briggs test shows almost 90% of the torque and horsepower on AquaFuel as compared to that of the same mass of gasoline. Also, the presence of free hydrogen in the combustion chamber in the amount indicated by NASA would produce nitrogen oxide in an amount much greater than that measured by Briggs & Stratton.

Moreover, comparative permeability tests conducted with AquaFuel and other gases have established a behavior which disproves the presence in AquaFuel of 46% Hydrogen, as claimed by NASA.

The test was performed by filling up similar balloons with hydrogen, CO, acetylene, helium and AquaFuel. The time needed to fully deflate the balloons back to their original static state was measured as follows:

Hydrogen	Two hours.
CO	Eight hours.
Acetylene	Two days.
Helium	One week.
AquaFuel	Three to six months.

As the gases leaked out of the AquaFuel balloon, the diameter was reduced by about 10 %. The other gases still in the balloon were flammable months into the test. The AquaFuel balloon-test was conducted three times.

New Energy Times Archive

In view of the above and other evidence, the chemical analysis by NASA cannot be considered conclusive, *e.g.*, because of the destruction of the original structures during testing.

Other tests on the chemical structure of AquaFuel have also been done, but they have been all inconclusive. As an example, tests indicating high nitrogen content are in contradiction with the evidence that much nitrogen in the mix would render the fuel a cold burner.

The ratio between the input and output energy is basically unsettled at this writing. In fact, all measures of input and output energies are underway, thus being unavailable at this writing in a final form. Nevertheless, the presence of additional sources of energy, via stimulated nuclear transmutations cannot be excluded at this writing because of a number of direct or indirect indications, such as that on the, "explosion of water mist" measured since the early part of this century. These issues require specific experimental measures (see Sect. 5) and theoretical studies (see Sect. 6).

All these inconclusive aspects, which have been studied until now by *conventional* analytic means, indicate that AquaFuel has new characteristics beyond existing knowledge. For instance, the compound with atomic weight 14 which is claimed to be Nitrogen could in reality be a new composite molecule. A similar situation could occur for other data.

5. ONGOING EXPERIMENTAL MEASURES

The most important experimental measures on AquaFuel of current primary interest to TTL are listed below. Suggestions and/or participations by interested colleagues would be appreciated.

1) *Measure the energy content of AquaFuel per unit volume in BTU or other units.* It should be indicated that a number of measures of BTU via conventional means have failed to provide any scientific answer for various reasons. As an example, readings of BTU compared to methane were inconclusive because the former burns with about half of the air (oxygen) requirement of the latter, thus voiding the scientific value of any measure without due thermodynamical consideration of the different air intakes. Similar unsettled results occurred with other measures. Innovative means for the needed measures are therefore under study.

2) *Measure the individual isotopes in AquaFuel originating from distilled water.* These measures are requested for AquaFuel produced from distilled water and 99% pure graphite so that the initial ingredients are known. The measures should then identify both the atomic number A (total numbers of protons and neutrons) as well as the nuclear charge Z (total number of protons) for each constituent of AquaFuel. Note that the identification of all atomic numbers A alone is grossly insufficient for an in depth scientific understanding of AquaFuel because of possible unsettled alternatives on Z for some of the expected A, as it will be explained in the next section. Measures conducted until now via gas chromatography and other conventional means have been inconclusive for various reasons. First, because it was not clearly resolved whether certain values of A refer to pure elements, or to clusters of them and, second, because of the inability to jointly identify the values of Z.

3) *Measure the chemical composition of AquaFuel originating from distilled water.* Upon identification of the individual isotopes, or jointly with the same, the next major measures requested by TTL are the identification of the chemicals that actually compose AquaFuel. Again, various tests done until now have resulted to be without final scientific value, *e.g.*, because they were based on personal beliefs by the experimenter disproved by evidence. As an example, the belief that AquaFuel is primarily composed by hydrogen has been disproved by comparative tests on the permeability of hydrogen and AquaFuel, and similar unsettled occurrences resulted in other measures.

4) *Measure the chemical composition of AquaFuel originating from water inclusive of waste to be recycled.* This additional knowledge is essential for the industrial application of AquaFuel as a means of recycling contaminated liquids. Various specific cases of recycling are under consideration for measures.

5) *Identify the chemical structure of the exhaust following combustion.* This additional knowledge is essential to understand the thermodynamics underlying the use of AquaFuel.

6) *Identify the physical characteristics of AquaFuel, such as specific density.* A knowledge of these characteristics is evidently a necessary pre-requisite for in-depth scientific studies on AquaFuel.

7) *Identify compressibility of AquaFuel to the liquid state.* A knowledge of the physical characteristics of temperature, pressure, etc., for the compressibility of AquaFuel to the liquid state is needed, as an evident pre-requisite for its storage in tanks.

8) *Identify the structure of the electric discharge in AquaFuel.* It is generally believed that electric discharges are composed of an intense flow of individual electrons. As explained in the next section, there are reasons to suspect that this is not necessarily the case for AquaFuel because of the alternative possibility already established in superconductivity that the electric discharge could be composed by an intense flow of electron pairs. The possible detection of the latter is evidently important, not only for an indepth scientific study of AquaFuel but, also, as a foundation of a new technology.

9) *Optimize AquaFuel.* On the achievement of at least the most important measures identified above, an important objective of TTL is the maximization of the characteristics of AquaFuel depending on the application at hand, such as the optimization of the energy/BTU content for combustion, the minimization or elimination of harmful by-products in recycling applications, etc.

6. APPLICATIONS OF AQUA FUEL

The applications of AquaFuel as a combustible gas which have been identified until now are truly numerous and can be divided into three classes:

APPLICATIONS OF CLASS I: FUEL. In this class we note:

I.1) Motor fuel because of the remarkable reduction of pollutants in the exhaust, high energy content, better safety, and other aspects indicated earlier;
I.2) Heating fuel for homes and industries, for the same reasons;
I.3) Cooking fuel, because it is clearly preferable over methane and other gases;
I.4) Industrial fuel for a variety of uses, such as for furnaces of the steel industry and others;
I.5) Emergency fuel, for instance, for the continuation of service in a broken pipeline of natural gas;

And others.

APPLICATIONS OF CLASS II: SERVICE. In this class we note:

II.1) Production of electricity for various industrial and consumer uses;
II.2) Recycling of liquid waste such as sewage;
II.3) Recycling of solid waste such as rubber tires;
II.4) Environmental clean-ups;
II.5) Desalination; and other uses.

APPLICATIONS OF CLASS III: PROCESSING. In this class we note:

III.1) Separation of water;
III.2) Production of new chemicals;
III.3) Production of gases; and other possibilities are currently

New Energy Times Archive

under study.

In summary, AquaFuel is a new combustible gas with undeniably less pollutant when compared to other fuels of current uses, it is very simple to be rapidly produced in large volumes, and it exhibits features which are clearly beyond pre-existing theories. As such, AquaFuel not only has many valuable characteristics and applications available now, but also constitutes a sound platform for systematic research leading to new technologies.

7. THE NEW METHODS NEEDED FOR SCIENTIFIC STUDIES OF NEW ENERGIES

Quantitative scientific studies of new forms of energy in general, and of AquaFuel in particular, require the consideration of all possible or otherwise expected profiles, including studies within the context of *particle physics, nuclear physics, chemistry, thermodynamics, superconductivity,* and other disciplines. Rather than being a drawback, this occurrence is important because the conduction of in depth, mathematical, theoretical and experimental studies on new forms of energy is expected to permit the understanding of their *origin*, which is an evident pre-requisite for the improvement of their efficiency in a systematic scientific way, rather than via the current empirical process of endless "trials and errors. "

It should be indicated from the outset that the use of conventional theories, such as Quantum Mechanics and Chemistry, has not permitted a scientific resolution of the various issues one way or the other, and has only caused unresolved controversies (see, *e.g.*, the related articles on AquaFuel and other topics in Refs. [2]).

It is today well established that the sole use of these theories has no longer a *final* scientific value for *new* energies. In fact, these energies, to be truly "new," by definition and conception, have to be "beyond" said conventional theories. This is due to the fact that quantum mechanics and chemistry have well defined limitations, while the processes underlying *new* energies clearly go beyond these limitations.

Unfortunately, the limitations of quantum mechanics and chemistry are "the best kept secrets of the trade" in the sense that they are known to true experts in the field, but never disclosed during Ph.D. classes or in orthodox technical papers. In fact, the very admission of these limitations is a *de facto* admission of the need for more adequate theories, and this is notoriously against established interests.

A systematic study of these limitations has been recently made available by this author in monographs [4]. As a nontechnical outline, we here mention that quantum mechanics and chemistry have a structure which is *linear* (*i.e.*, only dependent on the first power of the wavefunctions), *local* (*i.e.*, solely defined for a finite set of isolated points) and potential (*i.e.*, only admitting action-at-a-distance interactions derivable from a potential energy). As a consequence, quantum mechanics and chemistry can only represent systems as being composed of *point-like particles with action-at-a-distance interactions*. As an example, the valence electrons of the molecules used in new forms of energy (*e.g.*, the water used by AquaFuel) are represented in contemporary quantum chemistry as *dimensionless points*. Though of unequivocal scientific value, this is evidently only an *approximation* of nature because, in the physical reality, *all particles , including the valence electrons, have an extended wavepacket* of the order of 10^{-13} cm.

When the particles are at the (relatively) large mutual distances of an atomic structure (10^{-8} cm - which is 10,000 times bigger than the size of the wavepackets of the electrons), their extended character can be effectively ignored and the resulting theories are exact.

The best known example of the *exact* validity of quantum mechanics is the *atomic* structure. In fact, quantum mechanics has represented in a *numerically exact* way the *totality* of experimental data on the structure of the hydrogen atom.

The best known example of the *limitations* of quantum mechanics and chemistry is the study of the *two Hydrogen atoms* composing the hydrogen molecule because:

1) Quantum chemistry cannot represent the strongly *attractive* force between the two atoms since they are neutral, thus implying null average Coulomb forces among the atoms;

2) Quantum chemistry has been unable to represent throughout this century 100% of the binding energy of the hydrogen molecule;

3) Quantum chemistry cannot explain why the hydrogen and water molecules have only *two* atoms, since it has been proved to admit an arbitrary number of atoms;

4) Quantum chemistry cannot permit meaningful thermodynamical studies on reactions based on the hydrogen and water molecules because the 2% of binding energy which is not accounted for is deceptively small, since it corresponds to about 950 Kilocal/mole while an ordinary reaction requires about 20 Kilocal/mole;

5) Thermodynamics predicts a behavior of the hydrogen and water molecules under electric and magnetic fields dramatically against experimental evidence (*e.g.*, the capability for the molecule to be magnetized like an ordinary ferromagnet); and other shortcomings.

The origin of the above shortcomings is in the structure of molecules themselves, where we have valence electrons which can interact at mutual distances of the order of the size of their wavepackets, which is a distance 10^8 times smaller than the atomic distances. Under the latter conditions the extended size of the wavepacket of the particle is no longer ignorable, thus implying a clear limitation of quantum mechanics and chemistry.

In fact, the deep overlapping of the wavepacket of particles implies *new interactions* which are technically called *nonlinear* (in the sense of depending on powers of the wavefunctions bigger than one), *nonlocal* (in the sense that they are extended over the volume of wave-overlappings which cannot be evidently reduced to finite number of isolated points), as well as *nonpotential* (in the sense of being of contact / zero-range type for which the notion of action-at-a-distance potential has no mathematical or physical meaning of any type).

As such, the representation of the deep overlapping of the wavepackets of valence electrons as well as of other nuclear events is beyond any *credible* hope of quantitative treatment via quantum mechanics or chemistry on conceptual, mathematical and physical grounds.

To put it explicitly, any treatment of truly new forms of energy via quantum mechanics and chemistry is not scientific if considered as of, "final" character because these disciplines approximate everything as, "points," thus being unable to represent in any credible way the main mechanisms which are at the very foundation of the *new* energies. Comprehensive studies on the structural generalization of quantum mechanics for quantitative treatments of nonlinear, nonlocal and nonpotential interactions at short distances were initiated by *R. M. Santilli* at Harvard University back in 1978 under support from the U.S. Department of Energy [3]. The studies were then continued by an increasing number of scientists, and have resulted in over 10,000 pages of published research, including about one thou-

New Energy Times Archive

sand papers published in numerous mathematics and physics journals all over the world, some 20 advanced (post Ph. D.) monographs and about 40 volumes of proceedings of international conferences held in the USA and Europe (see monographs [4]). As a result of these collegial efforts Hadronic Mechanics has today reached operational maturity (see the recent 104 page-long memoir [5]).

The new mechanics was called by Santilli *Hadronic Mechanics* to characterize the description of strongly interacting particles, such as the nuclear constituents, collectively called "hadrons," under conventional long-range potential, as well as short-range, nonlinear, nonlocal and nonpotential interactions. It should be indicated that Hadronic Mechanics is the *only* mechanics available today for the consistent treatment of the new nonlocal and nonpotential interactions due to deep wave-overlappings. Other generalized theories have well-known physical inconsistencies, such as the inability to have unique and invariant numerical predictions. Note that Hadronic Mechanics coincides with quantum mechanics at large distances. Moreover, Hadronic Mechanics preserves all conventional quantum laws, such as Pauli's exclusion principle, Heisenberg's uncertainty law, etc., and only realize them in a more general way. The only differences occur at distances of the order of 10^{-13} cm.

As a result, Hadronic Mechanics has achieved Einstein's historical "completion" of quantum mechanics with new, generally small contributions at short range. Hadronic Mechanics has permitted the construction of a broadening of quantum chemistry called *Hadronic Chemistry* [12] (also called, "isochemistry" for certain technical reasons). Again, quantum and hadronic chemistry coincide everywhere except at short distances where the new chemistry includes the nonlinear, nonlocal and nonpotential effects which are absent in the older theory.

A main feature of the Hadronic Mechanics and Chemistry which is important for all new forms of energy, including Aqua-Fuel, is that:

> *When two particles couple themselves in a singlet at short distances (one with spin up and one with spin down) the new nonlinear, nonlocal and nonpotential forces due to deep wave-overlappings are so attractive to overcome possible repulsive Coulomb forces, and permit new bound states at short distances which simply cannot be conceived - let alone treated - by quantum mechanics and chemistry.*

The sphere with radius 1 fm = 10^{-13} cm in which Hadronic Mechanics and Chemistry have the novel effects is called *hadronic horizon*. In the outside of the hadronic horizon *conventional* quantum mechanics and chemistry hold, while in its interior the broader hadronic mechanics and chemistry hold. Conventional physical laws (such as Pauli's exclusion principle, total conservation laws, etc.) hold *everywhere* including in the interior of the hadronic horizon.

If particles have opposite charges, they naturally penetrate such a horizon (when in singlet coupling and under a number of other conditions, such as the conservation of energy and other total quantities) by therefore activating the new effects rather spontaneously. This is the case of electrons and positrons which naturally attract each other and can apparently form a new bound state at short distance (in addition to the known electronium at large distances) commonly known as the neutral πmeson [3].

On the contrary, if particles have the same charges, they can penetrate the hadronic horizon only under the assistance of an outside *trigger*, namely external conventional interactions which favor the particles to move toward each other against their repulsive Coulomb force. This is the case of the coupling of the valence electrons in molecular bonds in which the "trigger" is given by the nuclei of the molecules which, being positively charged, attract the the valence electrons to such short distances to permit their bond [12]. Systematic studies of the physical laws of new forms of energy as predicted by hadronic mechanics and chemistry are under way [11]. We outline below some of the advances permitted by the new theories which are playing a basic role in these studies. In fact, quantum mechanics and chemistry have permitted:

1) *The first theoretical representation of the bond of two identical electrons in the Cooper pair of superconductivity* [6]:

(1) e + e + "trigger" → CP (Cooper Pair at 10^{-8} cm)

which is in excellent agreement with experimental data in superconductivity, where the "trigger" is given by the cuprate ions (see Refs. [6] for technical details, including the clear emergence of nonlinear, nonlocal and nonpotential effects as a *necessary* condition for the attraction).

The scientific scenario can be here identified in a way so clear to un-mask possible nonscientific postures in favor of old theories for personal gains.

On one side, physical reality establishes that electrons can bond themselves, not only in the Cooper pair (where the bond is so strong that the coupled electrons have been detected to tunnel together through a potential barrier), but also in the helium (where the two orbital electrons often travel bonded together rather than isolated), as well as in ball lightning (in which electrons bond together in very large numbers as per incontrovertible evidence, this time visible by the naked eye). On the other side, quantum mechanics and chemistry simply cannot represent this physical reality at the level of individual electron pairs because of the Coulomb repulsion (they do provide a representation but only at the *statistical* level of an *ensemble of pairs* which is absolutely not the issue here, since we are referring to specific differential equations of structure clearly exhibiting an *attraction for one single and individual pair* of electrons [6]). *Ergo*, quantum mechanics and chemistry have limitations which cannot be denied as a condition for scientific credibility. The moment these limitations are admitted, and only then, the door is open to truly basic advances. Hadronic Mechanics and Chemistry do indeed permit a quantitative-numerical representation of the "attractive" force between the "identical" electrons in the Cooper pair, the helium, the ball lightning and other events in excellent agreement with experimental data [6]. By no means these results are expected to be unique because a beauty of real science is its polyhydric character. Studies with alternative approaches are not only welcome but actually solicited, *provided* that they achieve similar results in an invariant form.

2) *A new model of the hydrogen molecule with the first explicitly attractive force between neutral atoms due to the pairing of the valence electrons into a hadronic bound state at short distances called "isoelectronium"* [12],

(2) e + e + "trigger"→ IE (Isoelectronium at 10^{-11} cm)

where the trigger is in this case given by the positive nuclei of the hydrogen molecule. Hadronic Mechanics and chemistry have resolved all the shortcomings of quantum chemistry indicated earlier, by reaching for the first time: an explicit attractive force among the neutral atoms of the molecular bond due to the

New Energy Times Archive

short range bonding of the valence electrons into a single state; a representation of 100% of the experimental data; a quantitative explanation of why only two Hydrogen atoms are admitted in the molecule; and other advantages over quantum chemistry.

3) *A new model of the water molecule which resolves at least some of the existing problematic aspects* [12]. The reader should be aware that despite the conduction of studies since the initiation of science, the structure of water remains vastly unknown at this writing.

In fact quantum chemistry: a) does not admit a significant attractive force among the neutral atoms composing the molecule (the esoteric forces currently believed to yield the bond, such as the exchange or van der Waal forces, have been rigorously proved to yield very small, thus insufficient attractions); b) has been unable to represent 100% of the experimental data on the binding energy, electric and magnetic moments and other aspects; c) has been proved to admit admit an arbitrary number of hydrogen atoms in flagrant disagreement with evidence; d) cannot permit meaningful thermodynamical studies due to the excessively large error in thermodynamical units recalled earlier; e) predicts a behavior of water under magnetic and electric fields which is in dramatic disagreement with experimental evidence (*e.g.*, it has been proved via the use of quantum electrodynamics that water under a magnetic field should acquire a net North-South polarity as for an ordinary ferriomagnet, in gross disagreement with experimental evidence); and possesses other, generally unknown insufficiencies.

It is evident that, under all these insufficiencies, no study of new forms of energy using water, such as AquaFuel, SkyGas, water explosions, etc., can be considered as "final."

It is evident that the true scientific evidence is the *limitation* of quantum chemistry for truly scientific studies of these new forms of energy.

Again, once these limitations are admitted, the door is open to basic advances. Hadronic Chemistry resolves the above insufficiencies by permitting a deeper (although never "final") understanding of water [12]. Other approaches are welcome and encouraged.

4) *The first theoretical representation of the synthesis of the neutron as occurring in stars at their formation, namely, from protons and electrons* ***only*** (because at their formation stars are solely made up of Hydrogen) according to the reaction [7]

$$(3) \quad p + e \rightarrow n + \nu .$$

The above reaction verifies all known physical laws. Nevertheless, its rate (cross section) according to quantum mechanics is very small and, therefore, the reaction is believed not to have practical value. Hadronic mechanics recovers the above low rate for all energies, except at a specified threshold energy in which the rate of reaction (3) has a large peak.

Note that quantum mechanics cannot represent the neutron as a bound state of a proton and an electron only because of a host of inconsistencies all resolved by the Hadronic Mechanics and Technologies.

We should finally note that, though preliminary and in need of independent re-runs, an experimental verification of synthesis (3) was successfully conducted in Brazil [8].

5) The first theoretical representation of the stimulated decay of the neutron [9] according to the reaction

$$(4) \quad \gamma + n \rightarrow p + e + \bar{\nu} .$$

Again, the above reaction verifies all known physical laws. Quantum mechanics predicts that its rate is very small for all possible energies of the photon, thus having no practical value. Hadronic Mechanics and Technologies recover this feature, but predict the existence of a large peak in the rate of reaction (4) at a specific resonating frequency, thus permitting the stimulated decay of the neutron in a form suitable for industrial applications. It should be noted that the proton is stable and, as such, cannot be stimulated to decay according to current knowledge. On the contrary, the neutron is naturally unstable. The identification of means for its stimulated decay is, therefore, only a matter of time. We should finally note that, though preliminary and in need of independent re-runs, an independent experimental verification of synthesis (3) was successfully conducted in Greece [10].

6) *Stimulated nuclear transmutations due to an electron capture by certain nuclei* [11]. Nature establishes the existence of the *spontaneous electron capture* (EC), a process in which a given nucleus (A, Z) with total number of protons and neutrons A and total number of protons Z (the nuclear charge) absorbs one electron from the environment or from the peripheral atomic cloud. During this process the atomic number A evidently remains the same, but Z *decreases* by one unit because we have the synthesis of one neutron from a proton and an electron as per reaction (3), thus resulting in the nuclear reaction

$$(5) \quad (A, Z) + e + \text{"trigger"} \rightarrow (A, Z\text{-}1),$$

where the trigger represents all the conditions needed to allow the reactions, such as the energy missing in order to verify the basic principle of conservation of the energy.

Since the above reaction occurs spontaneously in nature (under the right circumstances), Hadronic Mechanics and Technologies predict that it can be stimulated under suitable conditions.

Note that transmutation (5) is predicted at a sub-nuclear level, that is, it should be studied as a process in the interior of *one-nuclear constituent*, because the same transmutation is not possible when studied at the *nuclear level*, that is, at the level of a nucleus as a collection of protons and neutrons.

7) *Stimulated nuclear transmutations due to neutron decay* [11]. If reaction (4) occurs in nature for an isolated neutron, it must evidently occur also when the same neutron is a member of a nuclear structure, resulting in the stimulated nuclear decay

$$(6) \quad (A, Z) + \gamma + \text{"trigger"} \rightarrow (A, Z+1).$$

Note, again, that the above stimulated nuclear transmutation can only occur at one, single, fixed resonating frequency, and can only occur at the sub-nuclear level, rather than at the level of a nucleus as a collection of protons and neutrons.

8) *Stimulated nuclear transmutations due to proton capture* [11]. Physical evidence establishes that two identical electrons can bond themselves into one single state, the Cooper pair in superconductivity, Eq. (1). A similar occurrence exists in the bond of the valence electrons in molecular structures, Eq. (2). It is evident that this physical reality is independent of the charge and the mass. As a result, the experimental evidence on the Cooper pair is *de facto* evidence on the expected existence of a similar occurrence for protons.

Hadronic Mechanics and Technologies therefore predict that, evidently under certain conditions, one proton can indeed bond itself to a nucleus despite their repulsive Coulomb forces, according to the reaction

$$(7) \quad (A, Z) + p + \text{"trigger"} \text{ ä } (A+1, Z+1).$$

We merely have an occurrence equivalent to the experimentally established creation of ball lightning, which is constituted by individual electrons bonding themselves to a large number of identical electrons. According to quantum mechanics, the creation and growth of such ball lightning is not allowed because of the Coulomb repulsion. Yet the phenomenon exists in the physical reality. Therefore, to do science, we have to accept

New Energy Times Archive

physical evidence and modify the theory to reach its quantitative interpretation, rather than trying to adapt physical evidence to pre-existing theories. Hadronic Mechanics and technologies do precisely that, by surpassing pre-existing theories to accommodate experimental facts.

The case on one proton bonding itself to a nucleus under the necessary conditions is fully equivalent in all respects to the accretion of ball lightning. The sole difference is that the proton is heavier than the electrons and the charges of reaction (7) are positive, rather than negative. The important point is that the underlying physical laws are exactly the same.

9) New thermochemical reactions [6]. It is evident that the availability of a new model of molecular bonds in general, and of the structure of water in particular, imply new chemical features and reactions which, as it is the case for stimulated nuclear transmutations (5), (6) and (7), simply cannot be predicted, let alone treated via quantum chemistry. One of these predictions which has already been verified experimentally is a novel behavior of the water and new chemical reactions under electric and magnetic fields with consequential release of new forms of energy.

It is evident that all the above new advances (1-9) are potentially applicable to new forms of energy, including AquaFuel, and they will likely identify new technologies. The theoretical research under way therefore contemplates the systematic application of the above new advances to various aspects of new energies including: A) Particle physics, such as the possibility that electric discharges are made up of isoelectronium pairs, rather than individual electrons as currently believed until now; B) Nuclear physics, such as the expected nuclear transmutation due to stimulated electron capture, decay of the neutron from the intense light in the discharge, accretion of protons in the completely ionized plasma, etc.; C) Chemistry, such as possible new chemical bonds and new chemical reactions with related release of new energies that are inconceivable for quantum chemistry; D) Thermodynamics, such as the new energy calculations which are not possible at the moment due to the excessive error indicated earlier; E) Superconductivity, because an electric discharge is the ideal limit case of superconductivity; and other aspects.

We hope to report in *Infinite Energy* the most salient advances on the above research for the benefit of all new forms of energies. The content of this paper first appeared in Hadronic Journal Supplement, Vol. 13, pages 1-22, 1998.

Acknowledgments

The author would like to thank William H. Richardson, jr., Jerry Kammerer, Mark Clancy, Ken Lindfors and all other members of Toups Technology Licensing, Inc., as well as Rob Jaeger, Peter Glück, Dieter and Yvette Schuch, and various colleagues, for invaluable critical comments on earlier versions of this paper.

References

1. W. H. Richardson,Jr., US Pat 5,435,274 "Electrical power generation without harmful emissions", July 25, 1995; US 5,692,459 "Pollution free vehicle operation", Dec 2, 1992; patents pending.
2. *Infinite Energy* No. 9, 1996; No. 10, 1996; No. 11, 1996; no. 13 1997; and no. 14, 1997; *International Journal of Oxygen Energy* No. 21, Feb 1996 p 142 in H. Roger Hind's column"News and Views."
3. R. M. Santilli, in *Hadronic J.* No. 1 and 2, 1978.
4. R. M. Santilli, *Elements of Hadronic Mechanics*, Vols. I and II, Ukraine Academy of Sciences, Kiev, second edition, 1995.
5. R. M. Santilli, *Found. Phys.* Vol. 27, 625, 1997.
6. A.O. E. Animalu, Hadronic J. No. 17, p. 379 91995. A. O. E. Animalu and R. M. Santilli, Intern. *J. Quantum Chemistry* 29, 175 (1995).
7. R. M. Santilli, JINR Comm. No. E4-93-352, Dubna, Russia; and Chinese *J. Syst. Eng. & Electr.* (patent pending).
8. C. Borghi *et al.* (Russian) *J. Nuclear Physics* Vol. 56, 147, 1993.
9. R. M. Santilli, in the *Proceedings of International Symposium on Large Scale Collective Motion of Atomic Nuclei*, G. Giardina *et al.*, Editors, World Scientific, Singapore (1997) (patent pending).
10. N. F. Tsagas *et al.*, *Hadronic J.* Vol. 19, 87 (1996).
11. R. M. Santilli, Physical laws of stimulated nuclear transmutations as predicted by hadronic mechanics, Toups Technical Reports TTL-98- RMS-003, 004 and 005 (1998)(patent pending).
12. R. M. Santilli and D. Shillady, "Ab initio isochemistry," I and II, IBR preprints 1998 submitted for publication. R. M. Santilli and D.D. Shillady, *Hadronic J.* Vol. 21 (1998), in press.

An Invitation to Explore the Frontiers of Knowledge

The international *Journal of Scientific Exploration* was established in 1987 to provide an unbiased professional forum for research and discussion of topics outside the conventional disciplines of science. Published topics have included anomalies in physics and astronomy, psi-phenomena, medicine, UFO's, astrological claims, cryptozoology, reincarnation investigations, etc. The goal of the journal is to make available high quality reports, reviews and commentary for use by researchers, teachers, students, and the general public. JSE is published quarterly.

Annual Subscription Prices
(four quarterly issues)
$ 40 - Special First-Time Personal
$ 50 - Regular Personal Renewal
$100 - Institutional (may request invoice)
(foreign add $5.00)

For further information contact:
JOURNAL OF SCIENTIFIC EXPLORATION
ERL 306,
Stanford University
Stanford, CA 94305
USA
Telephone: 415-593-8581
FAX: 415-595-4466

ANTIGRAVITY ON A DISC
Theory and Experiments
Contains over 1 megabyte of information in 12 chapters, 20 illustrations, one "sound bite," and two animations.
Only $14.95 — From Cold Fusion Technology, Inc.
P.O. Box 2816, Concord, NH 03302-2816
The information is presented in a manner that is accessible to the novice, yet is thorough enough to please the most advanced investigator.

- Discover how Edward P. Tryon's theory about the genesis of the universe may be used to produce new energy.
- Learn about the far-reaching ideas of Harold E. Puthoff.
- See and hear Frank J. Stenger's ball lightning machine.
- Explore Jan Pajak's magnocraft.
- View a plasma ball in a microwave cavity.
- Discover the error in the "Copenhagen interpretation" of quantum mechanics.

REQUIRES WINDOWS AND A 386 OR HIGHER PROCESSOR (Copyright 1995)
The author, Frank Znidarsic, has a B.S. in Electrical Engineering from the University of Pittsburgh, has an Associate in Science from Saint Francis College, and is a registered professional engineer in the state of Pennsylvania.

"Dr. O'Leary bluntly states that we can replace the current oil-based economy, renovate our nation-states and clean up the environment. ***Miracle in the Void*** is good reading for everyone who wants beneficial changes on the planet."
Jeanne Manning, Author, *The Coming Energy Revolution*

ORDER NOW!
A Stimulating Book by Physicist and Former Apollo Astronaut
$24.95 No. America, $29.95 Other foreign
(Includes First Class postage/Airmail shipping)
Cold Fusion Technology, Inc.
P.O. Box 2816,Concord, NH 03302-2816
Phone: 603-228-4516;
Fax: 603-224-5975
Credit card orders accepted.

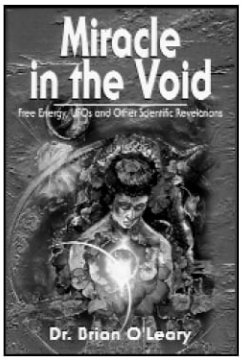

Part IV of a New Section for an old subject that is now being revisited in cold fusion and transmutation laboratories around the world...
(See *Infinite Energy* Issues #15/16 & 17 and 18 for Part I, II, III)

ALCHEMY – HISTORICAL REPORTS

Biological Transmutations

by Robert Nelson
(Rex Research, P.O. Box 19250, Jean NV 89019)

Long before the discovery of "cold fusion" by Pons and Fleischman, other scientists had variously found phenomenal evidence of non-radioactive, low-energy transmutation of light elements in plant, animals and minerals. These reactions have come to be known as "biological transmutations" or "nuclido-biological reactions". This class of nuclear reactions is of great importance to the progress of human knowledge in the fields of physics, cosmology, biology, geology, ecology, medicine, nutrition and agriculture. The exact mechanisms of biological transmutations remain unknown, though a few theories have been proposed to explain them. Biological transmutations exist and cannot be denied; they are the very core of living nature, which could not function without them.

The study of biological transmutation can be said to have begun in the 17th century with the famous experiment by von Helmont, who grew a willow tree in a clay vase with 200 pounds of soil. After 5 years, he dried the soil and found that its weight had decreased by only 2 ounces: "Water alone had, therefore, been sufficient to produce 160 pounds of wood, bark and roots" (plus fallen leaves which he did not weigh). Nowadays we know that plants form carbohydrates from atmospheric carbon dioxide, but their mineral content is not necessarily derived from the soil, and certainly not from air.

In 1799, the French chemist Vauquelin became intrigued by the quantity of lime which hens excrete every day. He isolated a hen and fed it a pound of oats which were analyzed for lime (CaO). Vauquelin analyzed the eggs and feces and found five times more Ca was excreted than was consumed. He concluded that lime had been created, but could not figure out how it happened.

In 1822, the English physiologist Prout studied the increase of calcium carbonate inside incubating chicken eggs, and was able to show that it was not contributed by the shell.

In 1831, Choubard germinated watercress seeds in clean glass vessels and showed that the sprouts contained minerals which did not previously exist in the seeds.

In 1844, Vogel also found evidence of biological transmutation. J.J. Berzelius reported the experiment in his *Treatise on Mineral, Plant and Animal Chemistry* (1849):

"He showed seeds of cress... in crushed glass deprived of sulfate or of any other sulfurous compound; he watered them with distilled water, covered them with a glass cloche and analyzed the air of the room, so as to determine the sulfur... A few months later, the adult plants with ripe seeds, were dried and burnt with a mixture of potassium nitrate and potassium carbonate; the result was that a quantity of sulfuric acid double that which was contained in the seeds was produced. These experiments demonstrate that either sulfur is not a simple element or that the source which produced the sulfur has remained unknown, despite all the care which had been taken to discover it..." (1)

Circa 1850, Lauwes and Gilbert observed an inexplicable variation in the amount of magnesium in the ashes of plants.

From 1875-1883, von Herzeele conducted 500 analyses which verified an increase in weight in the ashes of plants grown without soil in a controlled medium. He concluded that "Plants are capable of effecting the transmutation of elements." His publications so outraged the scientific community of the time that his writing were removed from libraries. They were lost for more than 50 years until a collection was found in Berlin by Dr. Hauscka, who subsequently published von Herzeele's findings.

M. Baranger (Ecole Polytechnique, Paris) became intrigued with Von Herzeele's experiments, but he thought that the number of trials had been too limited and the precautions against error were insufficient. Baranger decided to repeat the experiments with all possible precautions and a very large number of cases which would allow a statistical study. His research project lasted four years and involved thousands of analyses. Baranger verified the content of P, K, and Ca of vetch seeds before and after germination in twice-distilled to which pure calcium chloride was/was not added. Hundreds of lots of 7-10 grams each were selected, weighed to 1/100th milligram, and graded, then germinated in a controlled environment. The plants were tested by the methods described by A. Brunel-Tourcoing in his *Practical Treatise of Plant Chemistry* (1948). Baranger found a significant decrease in P in the Ca-series of tests. Non-germinated seeds and seeds germinated in the distilled water showed no significant change in their levels of K. Those seeds treated with $CaCl_2$ showed a 10% increase in their K content.

None of the specialists who examined Baranger's work was able to find any experimental errors. Baranger concluded that "These results, obtained by taking all possible precautions, confirm the general conclusions proposed by V. Herzeele and lead one to think that under certain conditions the plants are capable of forming elements which did not exist before in the external environment.

> ***His publications so outraged the scientific community of the time that his writings were removed from libraries. They were lost for more than 50 years until a collection was found in Berlin...***

"[The practical consequences] cannot be underestimated... Certain plants would bring to the soil some elements useful for the growth of other plants; this would lead us especially to define and revise the current notions on fallows, rotations, mixed crop, fertilizers and the manuring of infertile soils.

"Nothing prevents us from thinking that certain plants are capable of producing rare elements of industrial importance...

"In the sub-atomic field, the plant supplies us with an example of transformation which we are not capable of performing in the laboratory without bringing into action particles of high-energy... It seems that the theoretical consequences in the field of sub-atomic physics are not negligible."

In 1946, Henri Spindler, (Director of the Laboratoire Mar-

New Energy Times Archive

itime de Dinard) investigated the origin of iodine in seaweed, and found that the algae Laminaria manufactured iodine out of water which contained none of the element. (15)

Prof. Perrault (Paris University) found that the hormone aldosterone provoked a transmutation of Na to K, which could be fatal to a patient; heart failure occurs when blood plasma K reaches approximately 350 mg/liter.

In 1959, Dr. Julien (Univ. of Besancon) proved that if tenches are put in water containing 14% NaCl, their production of KCl increases 36% within 4 hours. **(5)**

Louis Kervran (Univ. of Paris) was the most ardent researcher of biological transmutation, and his work in the field earned him a nomination for the Nobel Prize. Kervran elucidated several of these nuclear reactions and verified that "the vital phenomenon is not of a chemical order... The nucleus of the atom in light elements is quite different from what nuclear physics regards as the average type, the latter having value only for the heavy elements... Nature moves particles from one nucleus to another — particles such as hydrogen and oxygen nuclei and, in some cases, the nuclei of carbon and lithium. There is thus a transmutation... Biological transmutation is a phenomenon completely different from the atomic fissions or fusions of physics... it reveals a property of matter not seen prior to this work." (4, 7-13)

Kervran found that in nuclido-biological reactions, oxygen is always in the form of O, never O_2; reactions with nitrogen occur only with N_2, insofar as is known. The following reactions (shown in simplistic form) have been observed:

$Na_{23} + H_1 \rightarrow Mg_{24}$	$Na_{23} + O_{16} \rightarrow K_{39}$
$Na_{23} - O_{16} \rightarrow Li_7$	$Na_{23} \rightarrow Li_7 + O_{16}$
$K_{39} + H_1 \rightarrow Ca_{40}$	$Mg_{24} + Li_7 \rightarrow P_{31}$
$Mg_{24} + O_{16} \rightarrow Ca_{40}$	$F_{19} + O_{16} \rightarrow Cl_{35}$
$C_{12} + Li_7 \rightarrow F_{19}$	$Cl_{35} \rightarrow C_{12} + Na_{23}$
$Fe_{56} - H_1 \rightarrow Mn_{55}$	$2\ O_{16} - H_1 \rightarrow P_{31}$
$O_{16} + O_{16} \rightarrow S_{32}$	$2\ N_{14} \rightarrow C_{12} + O_{16}$
$N_{14} + Mg_{12} \rightarrow K_{19}$	$Si_{28} + C_{12} \rightarrow Ca_{40}$
$Si_{28} + C_{12} \rightarrow Ca_{40}$	$P_{31} + H_1 \leftrightarrow S_{32}$

Costa de Beauregard (Research Director, Centre Nationale de la Recherche Scientifique, Paris) learned of Kervran's work in 1962 and began to correspond and meet with him. He offered the following observations and explanation for the processes:

"All transmutations proposed by Kervran have two traits in common: (1) The initial and final nuclei differ by the addition or subtraction of a piece of matter, *e.g.*, a proton (a hydrogen nucleus...), an alpha particle (a helium nucleus), a nucleus of oxygen or one of its isotopes, or perhaps some other familiar nuclei; (2) There is an energy excess or deficit in the order of 0.01 atomic mass units (a.m.u.)... or 20 electron masses, or 10 MeV, or 1.6×10^{-12} joules. The mass equivalent of this energy gap is of course needed in order to have the Lavoisier principle safe... This energy gap is very much larger than those occurring in chemical reactions. For example, if ... hens are indeed transmuting potassium into calcium (which is an exo-energetic reaction), the power they are radiating is so huge that it would, if in the luminous (electromagnetic) form, set everything on fire all around!"

In energetic terms, such flux would be equal to 10^{15} MeV/cm^2/second, or 160 watts/cm^2.

"Can we then imagine some sort of quasi-occult form into which the 'Kervran power gap' may be radiated (or from which it may be absorbed in the case of endo-energetic reactions)? No reasonable answer was available until... a bold theoretical assumption, due to Weinberg in 1967, turned out as experimentally true. Due to this 'neutral current hypothesis' we are allowed to write such nuclear reactions as:

$$p + v \leftrightarrow p' + v'$$

or: $$p + \underline{v} \leftrightarrow p' + \underline{v}'$$

or: $$p \leftrightarrow p' + v + \underline{v}$$

where p denotes a proton, v a neutrino, and $\underline{v}$ the anti-neutrino. We even have two sorts of neutrinos to play with: the electronic and the muonic one.

"With this we can in principle handle the proton type of Kervran's reactions (and also the other one in analogous fashion. One of the two protons in the reaction would be a quasi-free one, that is one with only the trivial, chemical binding. The other one would be bound inside the nucleus. Of course we then have the problem of getting the proton, with its electric charge, through the potential barrier of the nucleus, by the so-called 'tunnel effect' (a typical effect of wave mechanics). But this is part of a problem already mentioned: Life playing the information game, the field being the nucleus, and the rules being those of the wavelike probability calculus... If the Kervran hen does radiate the power gap in the form of neutrinos and/or anti-neutrino, this will be done in the quietest fashion, and go on completely unnoticed.

"Can we also handle in this way the endo-energetic reactions? Fortunately Nature provides us with an appropriate supply, because there are quite a few neutrinos and anti-neutrinos flying around us as part of the so-called cosmic rays. By another chance the upper limit of the energy per cosmic particle is so high that the 0.01 a.m.u. Kervran needs are very easily available.

"Finally, like the proton or the α-particle, the neutrino or anti-neutrino is something abundantly available... which makes it convenient for use by Life.

"Biological transmutation is a phenomenon completely different from the atomic fissions or fusions of physics...it reveals a property of matter not seen prior to this work."

"On the other hand, the extremely 'weak interaction' of the neutrino with other particles, which we have just found so convenient for avoiding the adverse effects of the Kervran power gap, now... faces us with great hostility. For how are we to reconcile this with the hypothesis that the hen is a furious neutrino source...? How can we simultaneously explain that the poultry keeper, and indeed the hen itself, do not feel the neutrino Niagara and that the source of it is inside the egg factory of the hen?

"This is the very Gordian knot of the information game problem, the nuclear physics analogon, if you like, of the so-called catalysis problem of ordinary bio-chemistry. The only tentative answer that I can think of, one I deem quite acceptable in principle, is that what looks like a flat self-contradiction in the physical realm of 'blind statistical prediction,' retarded waves and causality, is no more a contradiction at all if we assume that Life is playing with finality, advanced waves, and 'blind statistical retrodiction'... Life knows how to... induce probability decreasing processes." (2)

Kervran commented on that opinion in an unpublished manuscript: "For Costa de Beauregard, the apparent discordance with the postulate of the equivalence between mass and energy can be replaced by the postulate of emission-absorption of an occult mass bound to a particle of complete spin; it is thus that the neutrino with a 1/2 spin was invented... you would need a particle of complete spin with normally very weak interactions with matter, but 'catalyzed' biologically; it would not displease

New Energy Times Archive

me, within this perspective, to try the classic 'graviton' with spins 2 or 0, or a non-classical neo-graviton with spins 2, 1, and 0..."

Simply put, if an occult particle is emitted or absorbed in Kervran-type reactions, the conservation of angular momentum would require that it have a complete spin.

In a letter to de Beauregard (20 January 1963), Kervran noted that "This particle seems to have a mass of 0.011 a.m.u. or 1.8 x 10^{-26} gram in reactions with $\pm H^+$..." In another letter (17 October 1973), Kervran insisted that he "had not been speaking of energy, for here it was a question of an equivalence, not an identity... I prefer to hold to the notion, as measured at the mass spectrometer, of a difference of masses, for the problem of energy, in my reactions, can be written only in a very simplistic way by application to Einstein's law. There is certainly something else here, and therein lies the whole problem."

De Beauregard later noted that "In the terrestrial atmosphere there exists a particle in abundance with a rest mass m, and a maupertusien mass (or kinetic mass)... which is more than sufficient to assure the Kervran balances: the mu meson of cosmic rays...

"It is quite admissible to conceive of it as absorbed, then, re-emitted during the course of a nuclear transition of the Kervran type which, moreover, implies a 'virtual neutrino' (emitted, then reabsorbed)."

He also offered the logical possibility of a reaction with $^{i}N + {}^{1}H + \upsilon = {}^{P}N + \upsilon'$.

In a letter of 31 December 1973, de Beauregard wrote: "There is a second important problem to solve. To get the H to fuse with the N there is an enormous barrier of repulsing electric potential to pass through. Evidently this is by the tunnel effect. The theory which I am working up ... thus unites aspects of the theory of beta disintegration... and the theory of alpha disintegration... Like you, I believe that the configuration of an atomic or molecular electron cloud has a real word to say on the subject."

In his response (7 January 1974), Kervran attributed the transmutations in plants in part to the power of enzymes: "In a Petri dish 9 cm. in diameter I started germinating 50 oat seeds. The culture continued for 6 weeks or 3.6 million seconds give or take a few ten thousands of seconds... The area of 'cosmic interaction' was 63 cm^3... During this time on this surface 3.9 mg of K were transmuted into Ca; this must be ~ 6 x 10^{19} atoms of K transmuted in 3.6 x 10^6 seconds or 1.8 x 10^{13} atoms per second or 2.6 x 10^{11} per cm^2/second. The proportion of K transmuted was ~ 46% in 6 weeks. This integration of results for the phenomenon is not constant: it is imperceptible during the first days when one witnesses the synthesis of enzymes which will provoke the transmutations; even at the end of a week the effect is hardly to be noticed. It develops rapidly during the 2nd and 3rd weeks, then slows down during the 4th week... The phenomenon seems to be asymptotic and at the end of the 6th week transmutation progresses only very slowly.. Which demonstrates yet once again that the action of the ambient is insufficient, that there is an energy regulated by the metabolism of the germination and growth which is at the origin of these transmutations... Obviously this calculation was one for a macro-section and not for the effective section... Moreover, there is in biology an important phenomenon which must not be overlooked: some molecules assemble in helix shapes (DNA and RNA for example). There are also some oriented assemblages which polarize light, most often to the left. These oriented constructions have an oriented electromagnetic field, and a molecule such as DNA can be compared to a solenoid in which charged particles (mu^- for example) are somehow partly channeled in the interior, and thus concentrated..."

De Beauregard noted that "The microorganisms responsible for the phenomenon would find in the natural radiation a sufficient store of neutrinos of 10 MeV and more than they need... A diminution of this alimentation would consist of an equal numerical flux of neutrinos of very low energy to be put in the free interstices of the natural distribution. It is a problem of the symmetric information... in which (in thermodynamic terms) the difference between the 'heat' gained from the hot source (high energy neutrinos) and that given to the cold source (low energy neutrinos) is converted not into work, but into internal energy, or into the rest mass of the machine, which is not cyclical... Analogous comments apply to the case... implying an absorption of a pair, neutrino and anti-neutrino, of an average energy of 5 MeV... [The reactions] avail themselves of an abundant hot source like a geyser (the neutrinos of average energy of the cosmic radiation within the atmosphere) and of an immense cold source like an ocean, 'Fermi's lake' of very low energy neutrinos."

Kervran also proposed a revolutionary theory about the genesis of coal and oil. He was convinced that "coal comes from schists, fabricated *in situ*, by high compression that produced the reactions: Si → C + O. If O could not escape, and was compressed as well, one would have O + O → S, from which one gets sulfurous coals. If there was no deformation, the coal remains mixed with argil to produce ampelite." [The presence of carbon in metamorphic and silicate rocks, formed long before there was any vegetation on Earth] "demonstrates clearly that graphite cannot be of vegetal origin, in which case another origin must be found for it, and I propose the silicium of these Archaean rocks. As for diamonds... here, too, one observes the presence of silicates, thus of silicon... In this way one can explain why all coal deposits contain silicon (up to 20%, or even 40%, and more) which form 'ashes'. The great amounts of silicon might be an indication that the transmutation from Si to C + O was imperfect, incomplete."

Kervran was of the opinion that petroleum was not formed from flesh or plants, but from the reaction Mg → C + C at great depth. If water is present, the hydrogen combines with carbon, and the oxygen forms sulfur (O + O → S), giving sulfurous oil. The Mg can come from a pocket of saline water when Na + H → Mg. Otherwise, Mg also can come from Ca or from adjacent layers of dolomitic rock. Oil deposits in the Sahara have been found in pre-Carboniferous rocks (Devonian and Cambrian-Ordovician) and in dolomite. Usually there is no communication between layers of petroleum deposits of different composition which are widely separated by hundreds of meters of impermeable rock. Kervran concluded that "The whole problem of prospection should be thought out all over again.

In 1965, H. Komaki (Prof. of applied microbiology, Mukogawa Univ., Japan), published the results of his research, and suggested the probable occurrence of a nuclear reaction in the cells of *Aspergillus niger*, *Penicillium chrys.*, *Saccromyces cerv.*, and *Torula utilis* grown in potassium-deficient medium. His experiments revealed "the formation of phosphorus from another element (or elements), perhaps through C.L. Kervran's pathway: N + O → P in the cells of at least 24 strains of microorganisms" cultured in P-deficient medium. (14)

In 1971, the Laboratory of the French Society of Agriculture sprouted rye seeds under controlled conditions, with the following results:

	Total Input in Seeds & Water	Output	Difference
Mg :	13.34 mg.	3.20	-10.14 (-335%)
K	7.36	16.67	+9.31 (+133%)

In 1971, J.E. Zundel studied the utilization of Ca by germinat-

New Energy Times Archive

ing grains and observed 54-616% augmentation of Ca. In another experiment, he grew 150 grains of oats in a controlled environment for 6 weeks. 1243 sprouts were analyzed by atomic absorption spectrophotometry for Mg and Ca. Potassium was analyzed by flame emission. The K was deficient by 0.033%, the Ca was 0.032% in excess, and Mg as 0.007% deficient. The variation of Mg was not significant, but the decrease in K equaled the increase of Ca. The increase in Ca was far greater than the margin of experimental error. (16)

In February 1977, Prof. J.A. Jungerman (Univ. of California, Davis) reported to Kervran the results of an experiment with 4 growths of oat seedlings under carefully controlled conditions. Random samples of germinated seeds were analyzed by atomic absorption and X-ray fluorescence for Ca and K. He found no evidence of transmutation.(6)

In 1978, Carolyn E. Damon (U.S. Customs Tech. Service Div.) ran tests for biological transmutation with *Aspergillus terreus* and *Rhizopus nigricans*, with negative results.

In 1978, Solomon Goldfein (U.S. Army Material Tech. Lab, Ft. Belvoir) studied the biological transmutation of $^{39}K + {}^{1}H \rightarrow {}^{40}Ca$. His analysis of thousands of references led him to conclude that the most promising approach to testing the theory of biological transmutation would involve an organic molecule with a central metal atom: the chelate Magnesium Adenosine Triphosphate (Mg-ATP). Goldfein postulated a conformational structure of a stack of Mg-ATP molecules forming a helical chain. The Mg-ATP chelate produces oscillating electrical currents which act as a micromini-cyclotron that accelerates hydrogen ions to relativistic speeds with sufficient potential to transmute an element to the next higher number. **(3)**

This review is intended only to present a chronological outline of some of the reported observations and theories of biological transmutation. Research into the phenomenon continues in obscurity, practically unknown to most scientists. Eventually the subject will become established as a legitimate field of research which will yield rich harvests of knowledge.

References

1. Berzelius, J.J.: *Treatise on Mineral, Plant & Animal Chemistry* (1849, Paris).

2. de Beauregard, Costa: *Is Kervran a False or True Prophet?*; unpulished manuscript, 1963.

3. Goldfein, Solomon: MERADCOM *Report* 2247 (May 1978).

4. Jeuneman, Frederick R.: *Industrial Research/ Development* (December 1977), p. 11; *ibid.*, (May 1978), p. 202; *ibid.*, (November 1978), p. 15.

5. Julien: *Annales Scientifiques de l'Universite de Besancon*, Series 2 (1959)

6. Jungerman, J.A.: Letter to L. Kervran (11 February 1977).

7. Kervran, C. Louis: *Natural Non-Radioactive Transmutations: A New Property of Matter*; 1963, Librairie Maloine, Paris.

8. Kervran, C. L.: *Preuves Relatives a l'Existence de Transmutations Biologiques*; 1968, Libraire Maloine .

9. Kervran, C. L.: *Transmutations Biologiques: Metabolismes Aberrants de l'Azote, le Potassium et le Magnesium*; 1963, Libraire Maloine.

10. Kervran. C. L.: *Transmutations a Faible Energie*; 1964, Libraire Maloine.

11. Kervran, C. L.: *Transmutations Naturelles, Non-Radioctives*; 1963, Libraire Maloine.

12. Kervran, C. L.: *Biological Transmutations*; 1972, Swan Publ. Co., NY; Michel Abehsera, translator.

13. Kervran, C. L.: *La Revue Generale des Sciences, Paris* (July 1960).

14. Komaki, H.: *Revue de Pathologie Comparee et de Medicine Experimentale* (Sept. 1965).

15. Spindler, Henri: *Bull. Lab. Maritime Dinard* (15 June 1948); *ibid.*, (December 1946).

16. Zundel, J.E.: *Comptes Rendu Acad. D'Agriculture de France* 58: 288-293 (1972).

Aspden Patent continued from page 61

vacuum lattice theory which the author developed in the 1960s and published in 1972/1975. It is, however, also evident empirically from the action of proton creation in promoting the decay of tritium. The triton nucleus comprises what is effectively a two part structure linked together by a nuclear bond with one part of the structure seated at a charge site in the vacuum lattice. It is this site that is the target for the mu-meson attack by which the proton form is created. When the proton does form at such a site and that tritium nucleus is present, the two nucleon part converts to helium 3 and the single nucleon part decays to return the proton energy to the vacuum and sheds a beta minus particle. This reaction occurs with a release of a quite small amount of heat energy. namely 17.9 kev and with a 12.2 year lifetime. Accordingly. since the deuteron presumably has an affinity for the lattice sites in the vacuum, it is reasonable to expect the deuteron cold fusion reaction to occur with a similar incidence rate. The two deuterons will release 4 Mev in creating a proton and a triton and this will be the main source of heat followed by the triton converting to helium 3 and the onward heat evolution as helium 4 develops. The 12.2 year reaction probability, given a sufficient concentration of deuterons, could well accounts for any excess heat that can truly be said to involve a 'cold fusion' process.

It follows, therefore, that the primary technological problem of assuring that heat is generated in a cold fusion cell is that of bringing about the right concentration of deuterons in the host metal. This is not to be measured in number of deuterons per unit volume but in the number of deuterons that have a separation distance less than a certain critical threshold. That threshold distance can best be determined empirically but, whilst it can be penetrated by deuterons in a spurious activity where temperature gradients and field effects combine to be effective coincidentally, it is better if the Nernst Effect is harnessed more directly so as to create the negative charge background in a controlled way.

This, indeed, is the route by which the invention, the subject of the patent application Ser. No. 07/480.816 can develop, but one feels that the orthodox scientific establishment bias, which denies that 'cold fusion' can be a realit,. is so determined to obstruct progress that the outcome will be to the detriment of interests in the United States.

This Appendix commentary applies essentially to the substantive disclosure in the parent patent application Ser. No. 07/480.816 and is intended to be one of historical and public record besides eventually proving of relevance to the subject invention depending upon the outcome of events in the development of 'cold fusion.' I claim:

1. Thermoelectric energy conversion apparatus comprising (a) mutually parallel elongated cylindrical metal conductors disposed side by side with short bridging connecting conductor links at their ends so as to form a closed circuital loop, of which the elongated conductor sections are composed of nickel and the links are of any normal conductor material better suited to assuring an overall circuit of low resistance able to carry a current in excess of 100 amps, (b) a source of electrical input power and circuit control means for regulating the power delivered by the source to develop an a.c. voltage at a frequency less than 5 Hz, (c) an electrical transformer disposed between adjacent ends of the elongated conductors, the transformer having a primary winding connected to receive the power delivered and transform it into current in said metal conductors which are arranged to form the circuital loop as a secondary winding on the transform, the connecting conductor link at the transformer position passing through the ferromagnetic core aperture so as to constitute a segment of the secondary winding, and (d) two sets of heat sinks in thermal contact with the conductors at different positions along their length, with associated thermal transfer means for delivering and deploying heat one set of heat sinks seeing as a heat input source and one set serving as a heat output source, the a.c. current induced in the closed circuital loop being confined to passage through the elongated cylindrical metal conductors so as to develop a circumferential magnetic field about the conductor axis which interacts with heat flow along that axis to develop in turn an electric field within the conductor directed radially with respect to that axis.

2. Thermoelectric energy conversion apparatus according to claim 1, in which there are only two elongated metal conductors connected by two bridging connecting conductor links to form a loop which is a single turn secondary winding on said transform.

3. Thermoelectric energy conversion apparatus according to claim 1 or claim 2. wherein the circuit control means for regulating the power delivered by the source to develop an a.c. voltage at a frequency less than 5 Hz includes electronic power control circuit components which control the voltage waveform supplied to the transformer in an asymmetrical manner in which the voltage is lower and of longer duration in one polarity direction and higher but of shorter duration in the opposite polarity direction.

4. Apparatus according to claim 2, wherein there are two transformers aiding one another in powering the current flow in the conductor loop. these being toroidal transformers, one having a said bridging connecting conductor link passing through the central aperture of its toroidal core and the other having the other bridging connecting conductor link sirnilarity passing through its central toroidial core aperture.

5. Thermoelectric energy conversion apparatus according to claim 1, in which the elongated metal conductors are all of equal diameter and so equal cross-sectional area.

6. Apparatus according to claim 1, wherein the elongated cylindrical metal conductors are enclosed in thermal insulation along their lengths between the heat sinks in order to confine heat flow passage in an axial direction along the conductors.

New Energy Times Archive

Cold Fusion Comix

— A variety of humorous insights about the serious matter of New Energy, New Physics, and Scientific Heresy in general...

Hot Fusion is the Energy Source of the Future... And Always Will Be!

("Just give us $20 billion more and we'll have a break-even hot fusion reactor for you in TWENTY years")

DILBERT By Scott Adams

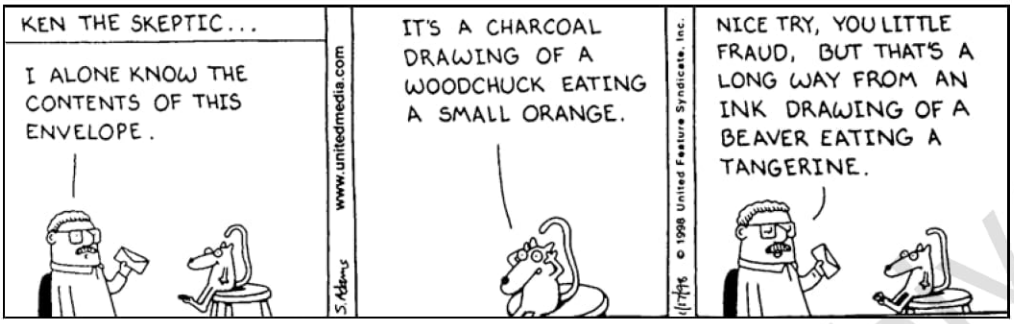

DILBERT reprinted by permission of United Feature Syndicate,Inc.

CAN YOU GUESS?

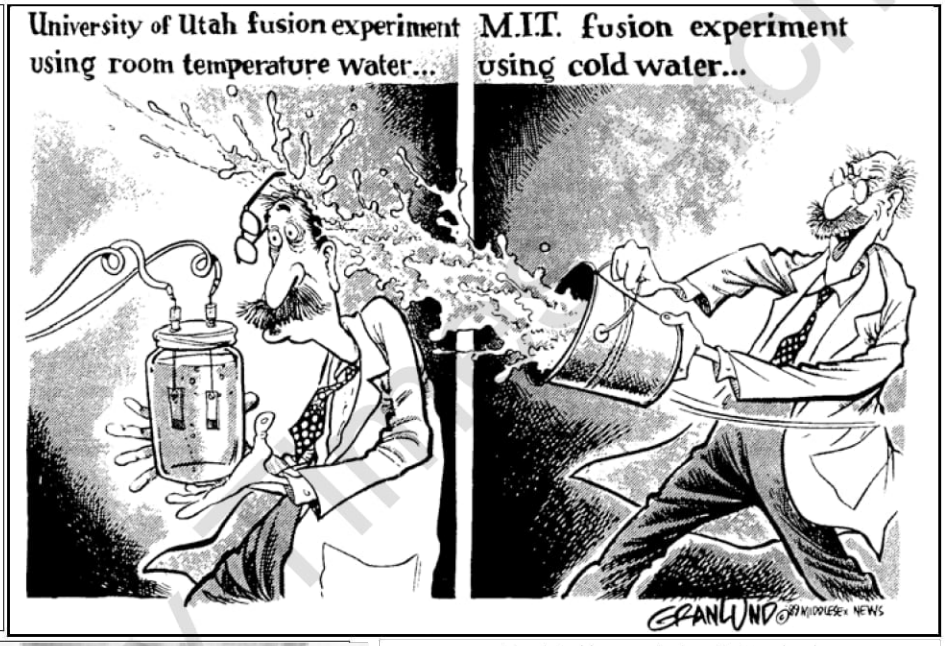

Reprinted by permission, D. Granlund

Send your humourous quotes or art to: Cold Fusion Technology, Managing Editor, P.O. Box 2816, Concord, NH 03302-2816

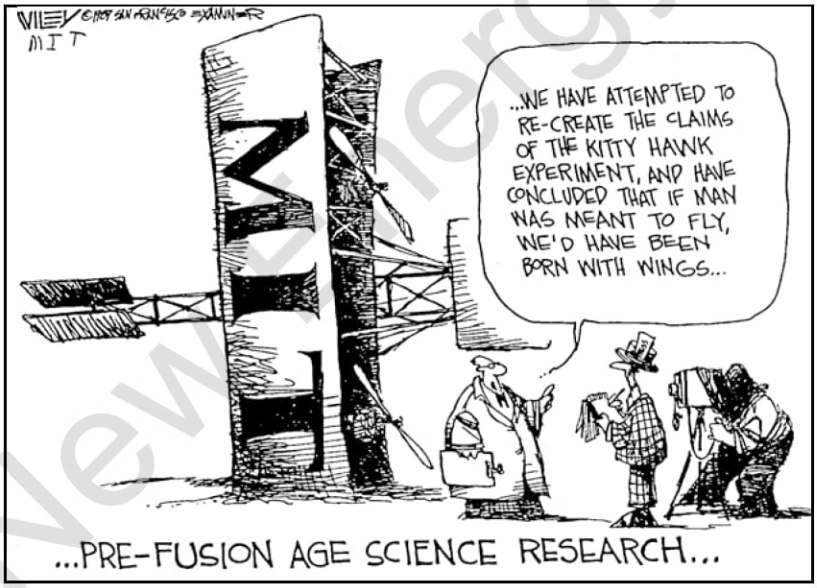

Reprinted with permission from The San Francisco Examiner

YOUR ADVERTISEMENT COULD BE HERE!

CALL 603-228-4516 FOR OUR ADVERTISING RATE SHEET.

FIRE FROM ICE:

Searching for the Truth Behind the Cold Fusion Furor

By Eugene F. Mallove, Sc.D.

Published by John Wiley & Sons, Inc., 1991, 334 pp.

$25.95 No. America; $29.95 Other Foreign

(Includes Shipping/Airmail)

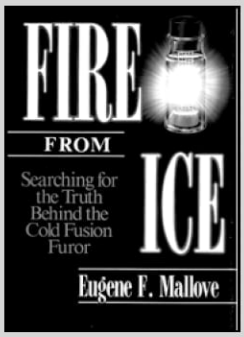

A timeless treatment of the greatest scientific drama of our age. Nominated for a Pulitzer Prize in 1991.

Cold Fusion Technology, P.O. Box 2816, Concord, NH 03302-2816; Phone: 603-228-4516; Fax: 603-224-5975; e-mail: staff@infinite-energy.com

New Energy Times Archive

HERESY...OR INTUITIVE SCIENCE? (Part 2)

by Susan Seddon

> ***"It is the customary fate of new truths to begin as heresies and to end as superstitions"***
> ***- T. H. Huxley (English Biologist) 1825-1895***

In the field of new energy research we're sadly all too familiar with the trashing of reputations. The scientific establishment, ever suspicious of creative new ideas, is capable of tarnishing the professional standing of the previously highly-regarded faster than a damp iron nail starts oxidising; usually when the scientist in question ventures outside the confines of his usual field of research, or proposes ideas unacceptably alien to "legitimate" scientific theory.

Whilst researching this article I encountered some degree of difficulty in locating information on some of the workers upon whom I wished to focus.

Interestingly, one self-claimed "comprehensive" Dictionary of Scientists carries no mention of Prof. M. Fleischmann, despite his Fellowship of the Royal Society and his world-wide reputation as an eminent electrochemist.

Perversely, however, it does mention Mary Baker Eddy, who founded a religious movement and was born a mile or so down the road from where our esteemed Ed-in-Chief currently resides, in New Hampshire.

I could also find no references to Jacques Benveniste, a classic example of the maligned scientist. The once-respected member of the French equivalent of the British Medical Research Council, appears to have been wiped from the history books because he dared to speculate and refused to be shackled by the bonds of acceptability in medical research.

His work on allergic reactions was well received and his reputation without flaw until he made some of his other incredible observations public.

Homeopathy, still regarded as "fringe medicine" by traditionalists was first practised in the 1500's by Paracelsus, the alchemist. This was, admittedly, in an extremely crude manner (he had some success in curing plague victims by feeding them minute amounts of their own excrement!).

His basic principle, however, is the foundation stone of modern homeopathy - "What makes a man ill also cures him" or "Similia similibus curantur" (likes are cured by likes) as Samuel Hahnemann stated when explaining his experiments with quinine on malaria victims in the early 1800's.

Benveniste had his own theories on the subject, and it proved to be his downfall. The results he gained with increasingly greater dilutions led him to believe that water itself was capable of retaining a memory of the substance it contained. His "Memory of Water" concept attracted media attention and Benveniste sought to publish his work.

The then editor of "Nature," John Maddox and his team of peer reviewers instantly dismissed the whole concept as heretical and refused to publish. After some wrangling they did, and eventually printed a very hostile editorial following a visit to Benveniste's lab by a team of "experts" whom Benveniste described as "non-objective fraud-busters".

Jacques and his work became something of a scientific joke; he was reviled by colleagues at the Pasteur Institute who said he was clearly delusional and yet, were forced to continue to ruefully acknowledge his reputation as a "fine chemist." The "Ayatollahs of Science" as he referred to them, clamoured for his resignation.

He didn't comply, instead he took his research a stage further, claiming he had succeeded in erasing the "memory of water" by passing chemical dilutions through a magnetic coil. He pondered whether it was possible to "record" onto water and envisaged future applications for such technology, such as retaining an imprint of an individual's medication on magnetic credit card type panels from which a pharmacist could easily produce the exact prescription required.

There was by now, however, little interest in his work. His contract was not renewed and his lab was closed. Ostracized from the scientific community he, like others similarly accused, could not comprehend what he had done that was so wrong.

Benveniste felt he hadn't had a fair hearing from his peers, even despite the emergence of supporting evidence from other workers who had reproduced his results.

"Science has become unfriendly to new ideas" he said bitterly in a television interview at the time. "My results were inexplicable in terms of traditionally understood chemistry and were therefore suspect."

Of course, it's much more difficult to purge a double Nobel prizewinner from the science history books. I thus found lots of references to the work of Linus Pauling.

Despite consistent references to his being "the outstanding chemist of the 20th century" he too, after a long and prestigious career was summarily exiled from the scientific community.

When he achieved his first Nobel in 1954 for his work on the nature of the chemical bond, he was unquestionably one of the scientific greats. It was said at the Nobel ceremony that his work in chemistry was "without peer in the 20th century in its vitality, vision and significance."

He was somewhat less revered, in certain quarters, prior to gaining his Peace Prize in 1962. His campaign to prevent atmospheric nuclear testing led to his passport being withheld and left him open to accusations of being a communist sympathiser. But those allegations (akin to a charge of treason in the days of cold-war paranoia) weren't his undoing.

For a flamboyant and colourful character like Pauling, it seems quite absurd that his simple promotion of the benefits of a commonly-found vitamin should herald his demise.

His fanatical belief in the protective and healing qualities of ascorbic acid brought him into bitter conflict with the medical

HERETICAL VERITIES

Mathematical Themes in Physical Description*

by Dr. Thomas E. Phipps, Jr.

$45.00 North America
$60.00 other foreign
(includes First class shipping/Airmail costs)

Order from: Cold Fusion Technology, Inc.
P.O. Box 2816, Concord, NH 03302-2816
Phone: 603-228-4516; Fax: 603-2284-5975

***See IE issue #17 for book review.**

New Energy Times Archive

fraternity. The privately-funded Linus Pauling Institute, at its peak, had 40 researchers all working to discover the potential benefits of vitamin C, and received over $3 million a year in donations.

Pauling applied his theory that vitamin C was the "most important substance in the world" to all areas of medical research, from the common cold to seeking a cure for AIDS. His results were either ignored, or rubbished. Pauling, however, remained undaunted. He had been right so many times before he refused to believe he had it wrong this time.

Most of his critics' objections arose from the fact that they considered he ought to stick with what he knew best - chemistry - and leave medicine to the "real" experts. Many claimed he was his own worst enemy because he refused to give in to peer pressure. Certainly, he enjoyed a good fight and accusations of "senile megalomania" only strengthened his resolve.

His persistence eventually paid off when young, less scientifically-inhibited researchers at Harvard started to take an interest in his "wonder substance" and found that it did indeed have therapeutic effects in some cases. Its value as an anti-oxidant was discovered. Statisticians at UCLA found that people who had a high daily intake of the vitamin appeared to live longer than those who didn't. Preliminary research using "double blind" testing indicated that cholesterol levels were greatly lowered in subjects given the vitamin.

Subsequently, and miraculously, Pauling was suddenly welcomed back into the bosom of science. He lectured on his pet subject right up until his death at the age of 93. His ideas still spark controversy, which would have pleased him. As he said in many of his lectures, "It is necessary, in some cases, to destroy the system before progress can be made and ostracism is the price which must be paid for that,"but the research he started is still continuing.

The system, unfortunately, hasn't changed much from Pauling's day. Resistance to the acceptance of new ideas is as virulent as ever.

It's a pity that more scientists today don't share Huxley's sentiment that he was "Too much of a sceptic to deny the possibility of anything."

Why not give INFINITE ENERGY as a Gift Subscription to a Friend or to your local library?

God's Secret Formula:
Deciphering the Riddle of the Universe and the Prime Number Code
by Dr. Peter Plichta
Available from Cold Fusion Technology, Inc.
$29.95 in North America, $39.95 elsewhere)
Phone: 603-228-4516; Fax: 603-224-5975

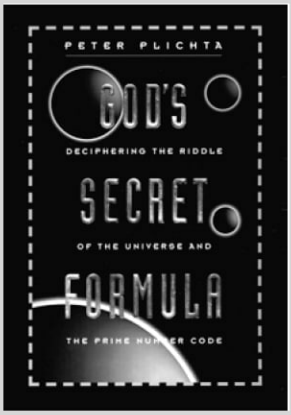

Phipps continued from page 71

The basic formula, Eq. (18), given here for back EMF has been verified within a reasonable margin of error by unreported experiments in my laboratory with a model Marinov motor run as a generator (*i.e.*, with magnets rotated by an external power source, the resulting AC voltage being measured across the "rings").

Summary

I have suggested here a first-cut design of a motor-in-a-wheel, employing the newest technical approach of the Marinov motor. We have sought primarily to gain a feeling for order of magnitude in respect to peak or static torque and the shape of torque curves. In that area it appears that the motor will easily suffice for civilian transportation requirements, but it may need higher supply voltages than might ideally be desired. If I am right as to theory and correct in my observations, it will prove a strong generator of back EMF, a circumstance that can be dealt with through automated adjustment of the phasing (timing) and/or amplitude/duration of input current pulses. Thus there need be no trade-off of static torque against high-speed performance: The same physical configuration should be able to provide both, along with regenerative braking and the effective "automatic transmission" necessary for arbitrary speed changes.

Although static torque is adequate, no attempt has been made here to quantify torque availability at high speed. Further, I regret to say that many of the more important design criteria by which engineers are accustomed to compare different electric motor types in a given application are simply beyond my ability to estimate. I refer particularly to a figure of merit such as kilograms per kilowatt. In automotive applications unsprung weight is recognized as especially significant, and again I must default. Weight and cost estimates are beyond me.

The upshot? Before the wheel-motor application discussed here can grow into the 500-lb gorilla class, considerable inventiveness and no little courage of innovative will be required of automotive engineers. From the present overview, Marinov's motor looks as if it should provide a good design starting point. But such a conclusion is meaningless without comparative data on more conventional designs. This I hope some readers (of the engineering persuasion) may be willing and able to provide. I trust it is needless to add that, like all electric vehicles intended for public use, this one should be a hybrid design – *i.e.*, in addition to batteries there should be a backup prime power source such as a fuel tank and a small turbine-generator. We must not make Marinov's mistake of supposing his motor to be a perpetual motion machine.

Acknowledgement

Illustrations by Richard Benish (rjbenish@teleport.com)

References

1. J. D. Kooistra, "The Marinov Motor – A Brief History of Mine," *Inf. Energy* 3, #17, 40 (1997).
2. T. E. Phipps, Jr., "Demystifying the Marinov Motor," *Inf. Energy* 3, #17, 43 (1997).
3. J. P. Wesley, "The Marinov Motor, Motional Induction without a Magnetic B Field," to appear in *Apeiron*.
4. S. Marinov, *Deutsche Physik* 1, No. 2, 9 (1992).
5. J. P. Wesley, "Induction Produces Aharonov-Bohm Effect," *Apeiron* 5, 89 (1998).
6. T. E. Phipps, Jr., "Observations of the Marinov Motor," to appear in *Apeiron*..
7. T. E. Phipps, Jr., *Heretical Verities: Mathematical Themes in Physical Description* (Classic Non-fiction Library, Urbana, 1986), p. 134, 185.
8. J. D. Jackson, *Classical Electrodynamics* (Wiley, NY, 1965), p. 143, Eq. (5.39).
9. E. H. Werninck, ed., *Electric Motor Handbook* (McGraw-Hill, London, 1978).
10. D. V. Richardson, *Handbook of Rotating Electric Machinery* (Prentice-Hall, Reston, VA, 1980).
11. O. Costa de Beauregard, private communication.

New Energy Times Archive

Infinite CLASSIFIED MARKETPLACE

200+ Unconventional Technologies, inventions, theories, experiments, therapies! Transmutations: Emmens (Argentaurum), Kervran, Ohsawa, Kushi (Biological), Miethe (Hg→Au), Moray(ores), Ramsay(H→He), Tiffereau, Castellot(Ag→Au), Smits(Hg→Pb), Jovivitsch(C→O), Wendt, Irion(W→He)& many more!
Amazing Archives Catalog! Send $2; Rex, P.O. Box 19250, Jean, NV 89019

FREE Gift if you visit OURPAL website
httP://www.Sourceindia.com/ourpal/

OUR PAL(R) ASIJA
MBA, PE, CDP, JD, ATM
AFFORDABLE
Intellectual Property
Attorney
PH:203-924-9538, FAX:203-924-9956
E-Mail:Ourpal@CompuServe.com
Jail-Mail: 203-924-4271
(AKA Voice-Mail)
Snail-Mail: 7 Woonsocket Ave.
Shelton, CT 06484
Free Inventrepreneurship Kit

SPACE ENERGY RECEIVERS—
Power from the Wheelwork of Nature.
Space energy receivers are defined as devices which apparently collect electrical energy from the surrounding space without applied force, by some process other than chemical or mechanical action. This booklet describes eight inventors and their devices, covering the years 1901 to 1945. Send $8.50 (postpaid) for US and Canada; $10.00 overseas, to: Simplified Tech. Service, P.O. Box 2140A, Champaign, IL, USA 61825

Interdimensional Computors Report $8, Space Travel Manual $9, Time Travel Designs $20, 200 Incredible Inquiry Catalog $1, 153 Village Circle, Garden Valley, ID 83622

YOUR CLASSIFIED AD COULD BE HERE!

Do you have electronic or other scientific equipment to sell, information to sell, newsletters, etc.? This is the waterhole for curious minds.

It will be seen by **thousands** of readers in at least 37 countries. Call-in, fax-in or mail-in your ad today. Credit card orders accepted. Include number/ expiration date. $.50 per word, art additional.

Cold Fusion Technology, Inc.
P.O. Box 2816, Concord, NH 03302

Cold Fusion & New Energy Lectures

by Dr. Eugene F. Mallove, Editor-in-Chief

Infinite Energy Magazine

and author of *Fire From Ice*

Generate lots of excess heat (and new-thinking!) in your scientific, engineering, business, civic, or religious organization. Call: 603-228-4516; Fax: 603-224-5975

Cold Fusion Technology, Inc.

"The Starflight Handbook is an indispensable compendium of the many and varied methods for traversing the vast interstellar gulf —don't leave the Solar System without it!"
—Dr. Robert L. Forward

"Very sensible, very complete and useful. Its good use of references and technical 'sidebars' adds to the book and allows the nontechnical text to be used by ordinary readers in an easy fashion. I certainly would recommend this book to anyone doing any thinking at all about interstellar flight or the notion of possibilities of contacts between hypothetical civilizations in different star systems."

—Louis Friedman, Executive Director, The Planetary Society

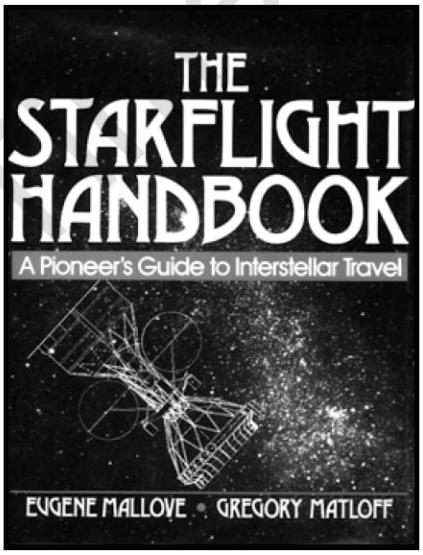

The Starflight Handbook is the first and only compendium on planet Earth of the radical new technologies now on the drawing boards of some of our smartest and most imaginative space scientists and engineers. Scientists and engineers as well as general readers will be captivated by its:

- In-depth discussions of everything from nuclear pulse propul sion engines to in-flight navigation, in flowing, nontechnical language
- Sidebars and appen dices cover technical and mathematical concepts in detail
- Seventy-five elegant and enlightening illustrations depicting starships and their hardware

A JOHN WILEY & SONS, Inc.
SCIENCE EDITION
Hardcover, 273 pages, extensive bibliography
ISBN 0-471-61912-4

ONLY $29.95 + $5.00 air shipping (North America); Other Foreign, $12.00 air-shipping

Send Payment to:
Cold Fusion Technology, Inc.
P.O. Box 2816,
Concord, NH 03302-2816 or, Fax
Credit Card Info: 603-224-5975

Ad Astra per Aspera!

1989 was a Big Year!
Cold Fusion —
and
The Starflight Handbook!

Too Cheap to Meter?
No, Too Cheap to Have a Meter — Get Off the Grid!

Get yourself off-grid by 2001
— it could happen...

New Energy Times Archive

(The following listing is not comprehensive. There is much more in each issue!)

Volume 1—1995-1996

Issue #1 (52 pages)

• "Cold Fusion: A Brief History of Mine" (Nobel Laureate Julian Schwinger) • "Welcome to the Apocalypse?" (Arthur C. Clarke) • Very Hot Cold Fusion: Ceramic Proton Conductors from Japan • Preview of Monte Carlo, Fifth International Conference on Cold Fusion • Table-Top Alchemy: Roger Stringham's Ultrasonic Cold Fusion Creates Helium-4 and Helium-3 and Lots of Excess Heat • Testing the Patterson Power Cell • Water Cavitation Reactor (Michael Huffman) • Japan TV Features "Over-Unity" Magnetic Motors

Issue #2 (56 pages)

• COLD FUSION Goes Commercial — Dr. James Patterson and Jim Reding of Clean Energy Technologies, Inc. (CETI) Aim to Help Clean Up the World • ICCF5 —Fifth International Conference on Cold Fusion • Alchemy Nightmare: Skeptic Finds Heavy Element Transmutation in Cold Fusion Experiment • Magnetic Resonance Amplifier • Major Oil Company Reveals Secret Positive Cold Fusion Experiment of 1989 • Moldova Water Fuel Device • The MIT Cold Fusion Patent (#5,411,654) • Experimenter's Corner: Nuclear Effects from Self-heated Wire? •Unitary Quantum Mechanics (Lev Sapogin)

Issue #3 (60 pages)

• Low Energy Transmutation Conference in Texas • Testing Excess Heat Cavitation Devices (Worldwide Reports) • Cold Fusion Companies and Products • High-School Student's Cold Fusion Experiments • Applying the Nucleon Cluster Model to Experimental Results • Table-top Sonoluminescence • How to Miss the Energy Boat • A Brief History of a Book • Mechanisms of a Disobedient Science

Issue #4 (60 pages)

• Pons and Fleischmann Patent to Issue in Europe • Mizuno's Solid-State High Temperature Cold Fusion • 80-to-1 Cold Fusion Demo at Hot Fusion Meeting • Atomic Bomb Physicist (Dr. Joseph McKibben) Proposes Startling Cold Fusion Theory • The Piantelli Cold Fusion Patent • ICCF5 Talk by Los Alamos's Dr. Edmund Storms • Kawai Magnetic Motor (US Patent #5,436,518) • Acoustic Levitation • The New Scientific Age (Dr. Brian O'Leary) • Cold Fusion Documentary, "Too Close to the Sun" on BBC and Canadian TV

Special Double Issue # 5 & 6

(120 pages)

• CETI's 1-kilowatt Cold Fusion Demo • *Infinite Energy's* 1996 Cold Fusion Symposium, Cambridge, MA • Patterson Power Cell on ABC-TV Good Morning America and Nightline • Latest Patterson Patent • Takahashi's Super Magnets • MasterPrinciple of EM Over-Unity (Tom Bearden) • HydroCatalysis Power Corporation • Chinese and Russian Cold Fusion Conferences • Transmutations in Palladium (Bockris and Minevski) • The Nucleon Cluster Model (and *color* periodic table) • The Energy Active State in Pd-D (Ed Storms) • Griggs HydroSonic

Issue #5/ 6 continued

Pump • Newman's Energy Machine • **COLD FUSION RESOURCE GUIDE —1996** (Frequently Asked Questions; Cold Fusion, What it Does; Basic Information Resources; Seminal Articles: Experimental Evidence; Highlights of Cold Fusion History: A Timeline

Volume 2—1996-1997

Issue #7 (72 pages)

• The Correa Pulsed Abnormal Glow Discharge Reactor —Generating Electricity NOW! •Japan Research Yields Transmutations in Metals • International Symposium on New Energy-III (Denver) • Los Alamos Lab's Cold Tritium Generator Goes Public • NASA Confirms Excess Energy • Cold Fusion and New Energy—An Environmentalist's Perspective • The Energy Machine of Joe Newman (book review and other reports)

Issue #8 (64 pages)

•Overview of the Correa Invention (Mike Carrell) • The Reality of Perpetual Motion (Dr. Harold Aspden) • A "Chain Reaction" of New Energy Movies (*Chain Reaction* Debuts) • Properties of Palladium and the PF Effect (Ed Storms) • Interviews: Dr. John Bockris and Dr. Hal Puthoff • SuperTube (Moray King)

Issue #9 (72 pages)

• Prof. George Miley, *Fusion Technology* Editor, Confirms Low Energy Transmutations in Patterson Cell • "SuperPower, Inc." Investment Fund (Eugene Mallove) • Cold Alchemy: Landmark Low Energy Transmutation Conference in Texas • AquaFuel -Wonder Fuel of the New Energy Age • The Wright Brothers and Cold Fusion (Jed Rothwell) • "Anti-Gravity" Experiments Go Public • Mass Modification Experiment Definition Study (Dr. Robert L. Forward) • Book Review: *The Coming Energy Revolution* (Jeane Manning)

Issue #10 (72 pages)

• CETI's Table-Top Research Nuclear Reactor, Rent for only $3,750/Year • ICCF6 in Japan — Sixth International Conference on Cold Fusion • Transmutation in Biology? • Experimenter's Corner: Iron from Carbon, Oxygen, and Hydrogen??? • "Over-Unity" in Carbon Arc Nuclear Reactions • Adams Aspden Motor Patent •Triode Cold Fusion Cell (Evan Ragland) • Open Letter to Japan's NHE Cold Fusion Lab Directorate •Breakthrough in Thermoelectrics

Issue #11 (80 pages)

• An interview with Dr. Martin Fleischmann (Chris Tinsley) • *The Saint* Cold Fusion Movie • Vacuum Energy Patent Issued (#5,590,031) • Zero Point Energy Confirmed at Los Alamos • More AquaFuel Testing • Review of EPRI -SRI International Cold Fusion Report • Coping with the US Patent Office on Cold Fusion • BlackLight Power Corp • Review of Graneau's *Newtonian Electrodynamics* • Experimental Evidence for Nucleon Cluster Model • Adams-Aspden Motor Patent

Issue #12 (72 pages)

• BlackLight Power Corporation and Randell Mills • Arthur C. Clarke on Cold Fusion • Cold Fusion and the Future (Part I, Jed Rothwell) • Cold Fusion Cell Makes DOE Cold

Issue #12 continued

Fusion Critic Blink • Arata and Zhang: Massive Helium/Heat Production in Cold Fusion • Protonic Conductors and Cold Fusion — A Russian Perspective • Charge Clusters in Operation (Hal Fox) • *Wizard* Tesla Biography (Jeff Kooistra) • Energy Gain in Low Energy p and D Nuclear Reactions • Palladium, Platinum, Gold Futures • Drs. Patterson and Cravens Receive New Cold Fusion Patent • CETI/ENECO Patent Dispute in Europe

Volume 3—1997-1998

Special Double Issue #13 & 14

(128 pages)

• Remediation of Nuclear Waste — Demo Transmutation Units go on Sale! • New Energy Investment Fund Launched • Cold Fusion and the Future (Part II) • Tesla Symposium • Extracting Intermolecular Bond Energy from Water • Carl Sagan and Cold Fusion • Science Writers and Cold Fusion • Whither *Hot* Fusion? • Paul Brown and Nuclear Battery • Continuing Research into T.H. Moray • BlackLight Power Financial News • Neutrino Power? • Adams Thermo-Motor Generator...

Special Double Issue #15 &16

(128 pages)

• Dr. Melvin MIles' *et al.* US Navy Report Nails Down Evidence for cold fusion — excess heat and helium• Radioactivity reduction patent issued to CETI–full text • NASA Breakthrough Propulsion Physics conference • Historical reports on claims of low-energy transmutation • UV excimer laser production of new elements on cold fusion metals • What Nobel Laureate Glenn Seaborg told President Bush about cold fusion only three weeks after the Utah announcement • "Gold Fusion"— The Economics of Alchemy • Dr. Hal Puthoff: "Can the Vacuum be Engineered for Spaceflight?"

Issue #17 (96 pages)

• Cold fusion and transmutation conference in Italy — three reports • Interview with Dr. Randell Mills of BlackLight Power, Inc. • Full text of Mills patent, granted in Australia • Marinov Motor proved to violate standard EM theory — repeatable, simple experiments, proposed theory by Dr. Thomas Phipps, Jr. • More on the PAGD™ reactor excess electrical energy phenomenon • Three new reports of early 20th century low-energy transmutation— papers in mainstream science journals! • Review of *Heretical Verities* • New book from Japan on Cold Fusion and Transmutation bares all • Cincinnati group transmutation — more evidence emerges • Larry Niven "Tabletop Fusion" • Cold Fusion Comix

Issue #18 (88 pages)

• Nuclear Augmented Combustion Emerges • Review of Arata-Zhang's Cold Fusion: Helium and Excess Heat • US Army Report on Biological Transmutation • New Feature: "Words to Eat"— Silly Sayings of the Cold Fusion Skeptics • Enter "Miracle #2": Electrochemical Activation Method for Cheap, Rapid Water Sterilization • Testing of Adams-Aspden Motors • The President and the "HeavyWatergate" Scandal • More on the History of Modern Alchemy • Ken Shoulders' EV Technology Reviewed • The Marinov Motor is NOT a Homopolar Generator • Cold Fusion Pioneer Kevin Wolf Obit. • Cold Fusion Comix — and MORE . . . MUCH MORE. . . !

New Energy Times Archive

SUBSCRIBE TO THE LEADING PUBLICATION

Infinite Energy

Cold Fusion and New Energy Technology

(Visit our website: http://www.infinite-energy.com)

Eugene F. Mallove, Sc.D., Editor-in-Chief

Now in our Fourth year, *Infinite Energy* magazine premiered with the March/April 1995 issue, which was distributed to the participants of the Fifth International Conference on Cold Fusion (ICCF-5), held in Monte Carlo Monaco (April 1995). The May/June 1995 issue was sent to many hundreds of current subscribers, journalists, and libraries. In 1997 we passed the 1,500 subscribers mark and now have subscribers in over three-dozen countries. The magazine now has limited distribution on select U.S. newsstands and is expected to expand greatly now that commercial applications are emerging. *IE* is presently subscription-driven through ads in international magazines. Typical 1996/1997 press run: 5,000 copies/issue.

Infinite Energy is an international technical magazine with outreach to the general public as well. It is written at the technical level of *Scientific American* or *Science News* — except for some highly technical papers which are original contributions. To maintain the highest editorial standards, it is written and edited by scientists, engineers, and expert journalists. It is aimed at pioneering scientists, engineers, industrialists, and investors who are entering an exciting new R&D area. This area continues to grow explosively, with significant involvement by corporations and institutions in the U.S., Japan, France, Italy, India, Russia, and China. New technology developments and scientific discoveries are being made monthly and reported in the peer-reviewed scientific literature. ***Infinite Energy*** reports on the latest information that is now pouring in from research centers around the globe.

SUBSCRIBE OR RENEW TODAY!

The highly affordable subscription price of this bi-monthly magazine of general and technical interest **is only $29.95** for residents **of North America.** (To cover first-class air mail for other countries, the annual foreign subscription price is $49.95). Annual subscription price includes six issues per year.

Cold Fusion Technology, Inc.
P.O. Box 2816
Concord, NH 03302-2816

Fax: 603-224-5975
Phone: 603-228-4516
website: http://www.infinite-energy.com

Subscribe to or Renew *Infinite Energy*. Any six single back issues, $29.95 in North America , $49.95 for other foreign.

Issues currently available: 1, 2, 3, 4, 5, 6, 7, 8, 9, 10, 11, 12, 13, 14, 15, 16, 17, 18, 19

New ____ **Renew**____

Name:_____ **Start at issue no.** _____**(see above)**
Address:_____
Address:_____
City:_____ State:_____ Postal Code/Zip:_____
Country:_____ Phone:_____ Fax:_____
If using Credit Card: Check one: Master Card ____ VISA____American Express____
Card Number: _____Expiration Date: _____
Signature_____ **Optional:** E-Mail address_____

(ISSN 1081-6372)

New Energy Times Archive